INDEX

INDEX ____ PAGE A

HARNESS ARRANGEMENT ____ PAGE B

CABLE ARRANGEMENT ____ PAGE C

CIRCUIT BREAKER CODE ____ PAGE D1 & D2

CONNECTOR CODE ____ PAGE E1 TO E6

DIODE CODE ____ PAGE F

RELAYS CODE ____ PAGE G

RESISTOR CODE ____ PAGE H

SWITCH CODE ____ PAGE I

TELL-TALE LITE CODE ____ PAGE J

ACCESSORIES SYMBOL ____ PAGE K

WIRING DIAGRAM INDEX ____ PAGE L

SPARE WIRES ____ PAGE M

WIRING DIAGRAM ____ PAGE 1 TO 24

PREVOST

LEGEND

FRONT JUNCTION PANEL
REAR JUNCTION PANEL
BATTERY COMPARTMENT
CIRCUIT BREAKER
HARNESS CONNECTOR

BATTERY JUNCTION BLOCK
SINGLE CONNECTOR
DIODE (RECTIFIER)
OPTION

[illegible]

THIS DOCUMENT IS THE EXCLUSIVE PROPERTY OF PREVOST CAR INC. [illegible]

ITEM	DATE	REVISION	PAR
B	03-81	MISE À JOUR	B.C
A	03-88	ETAIT /J008	B.C

DESC : INDEX

DESS: D.T.

DATE- 88-02

VER.-

APPR.-

APPL: EFF. W/J009 △A

REF: H5-60

NO: D-060660 p. A

C

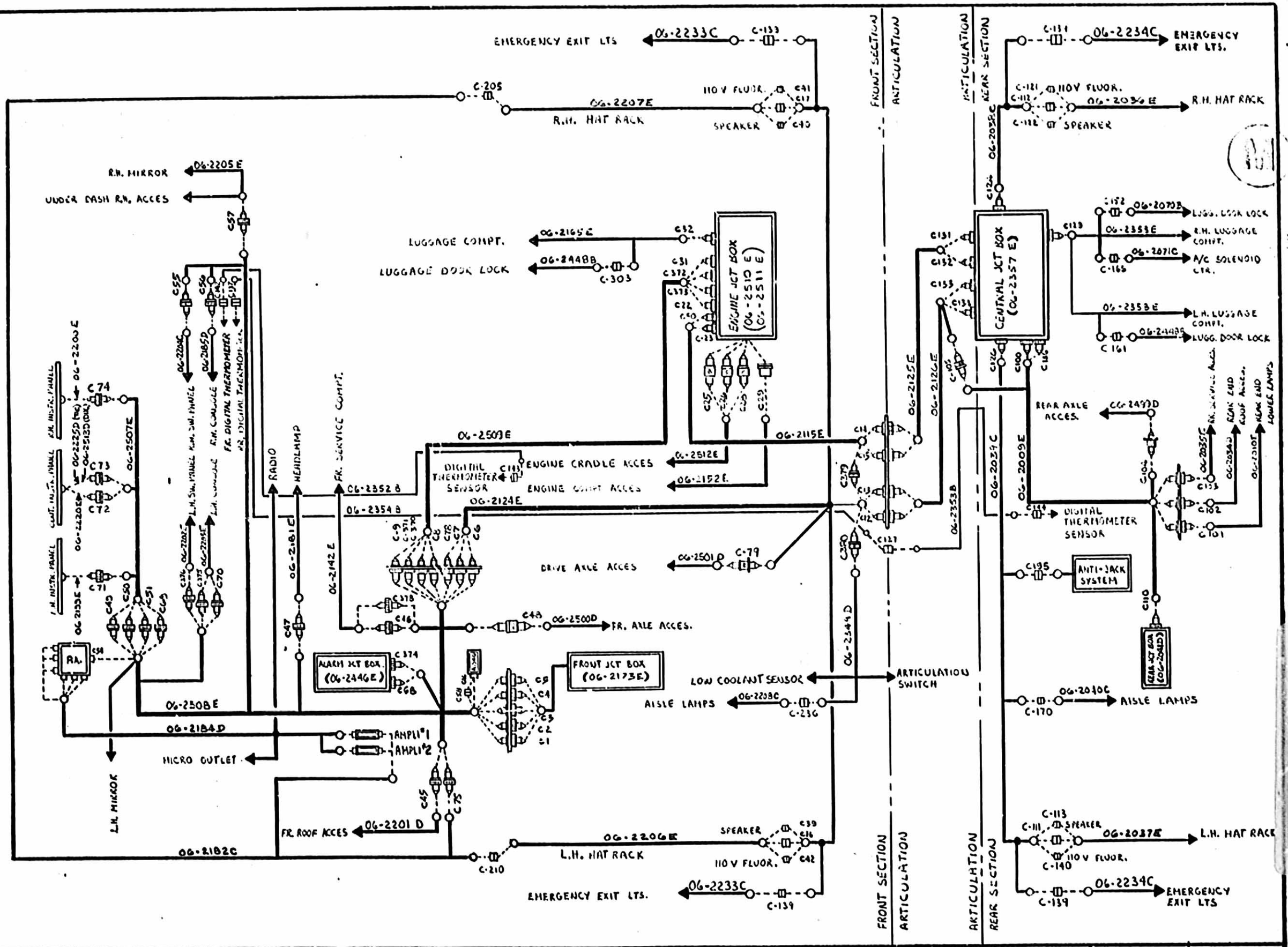

LEGEND	
FRONT JUNCTION PANEL	BATTERY JUNCTION BLOCK
REAR JUNCTION PANEL	GROUND CONNECTOR
BATTERY COMPARTMENT	DIODE (WHERE USED)
CIRCUIT BREAKER	OPTION
HARNESS CONNECTOR	

ITEM	DATE	REVISION	PAR
C	91-02	MISE À JOUR	M.L
B	03-89	CD° 16260	M.L
A	03-88	ETAIT /J008	B.C

DESC : HARNESS ARRANGEMENT

DESS: D.V. DATE- 88-02

VER.- CC APPR.-

APPL: EFF. W/J009 ⚠ PRIOR J033 REF: H5-60

NO: D-060660 p. B C

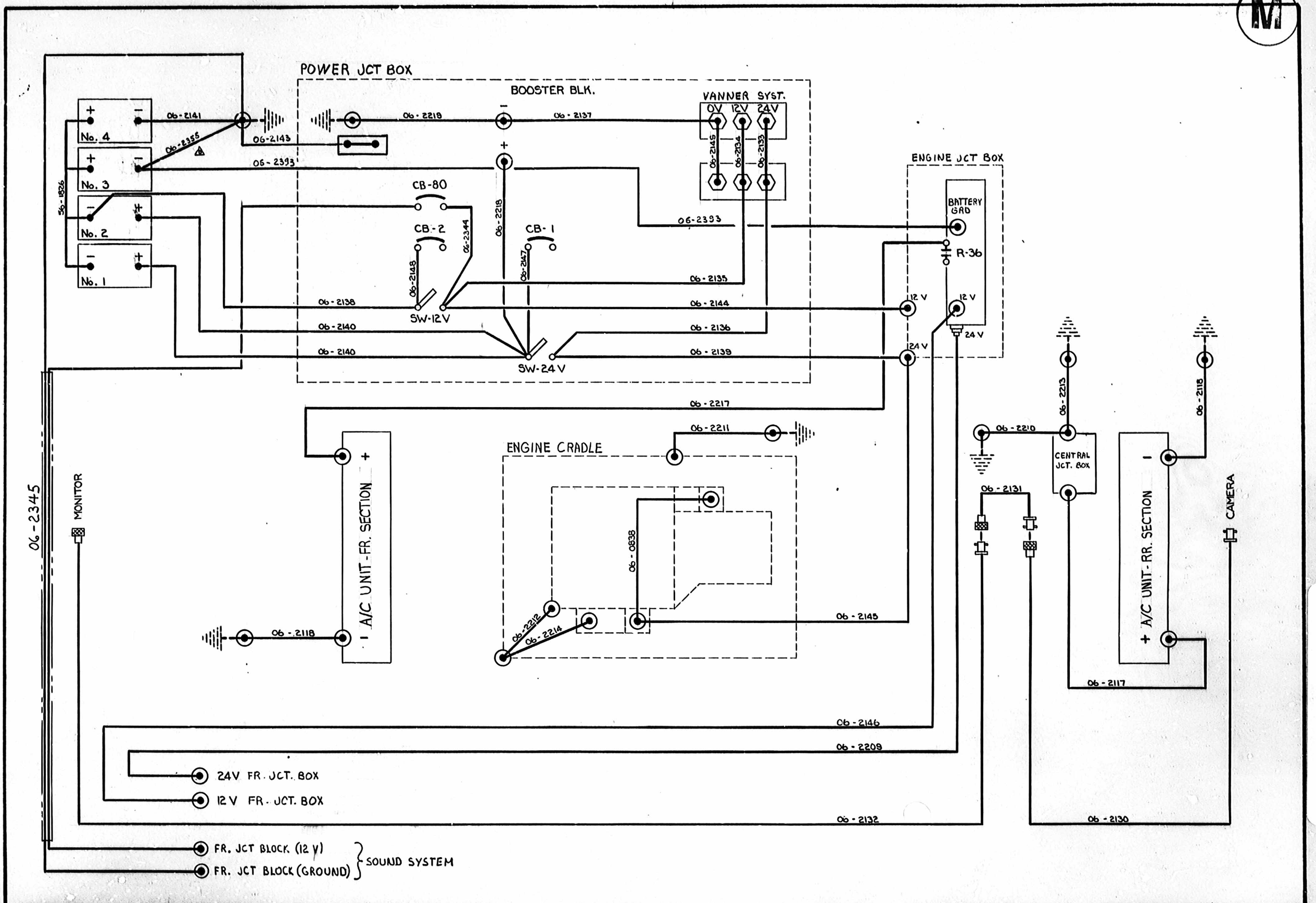

PREVOST LEGEND

FRONT JUNCTION PANEL	BATTERY JUNCTION BLOCK
REAR JUNCTION PANEL	SINGLE CONNECTOR
BATTERY COMPARTMENT	DIODE (RECTIFIER)
CIRCUIT BREAKER	OPTION
HARNESS CONNECTOR	

ITEM	DATE	REVISION	PAR
C	88-05	MISE A JOUR	B.C.
B	88-03	MISE A JOUR	B.C.
A	88-03	ETAIT /J008	B.C.

DESC.: CABLE ARRANGEMENT

APPL: EFF. W/J009

REF: H5-60

DESS: D.T.

DATE- 88-02

VER.-

APPR.-

NO: D-060660 p.C

C

M

CIRCUIT BREAKER CODE

CIRCUIT BREAKER					
CB#	AMP.	VOLT.	DIAG. PAGE	LOCATION	FUNCTION
1	30	24	1	POWER JCT. BOX	24 V HOT WIRE
2	30	12	1	"	12 V HOT WIRE
3	90	24	1	ENG. JCT. BOX	24 V FEED FRONT JCT. BOX
4	70	24	1	"	24 V FEED CENTRAL JCT. BOX
5	70	12	1	"	12V FEED FRONT JCT. BOX
6	8	24	1	FR. JCT. BOX	FEED MASTER SWITCH
7	8	24	1	ENG. JCT. BOX	ENGINE - RR START SW. & SERV. LT.
8	8	24	1	"	RR ENGINE CTR SW
9	8	24	1	FR. JCT. BOX	WEBASTO SW.
10	15	24	1	ENG. JCT. BOX	WEBASTO
11	20	12	2	"	ECM (DDEC II)
12	20	12	2	"	ECM (DDEC II)
13	5	12	3	"	ECU (ATEC)
14	8	12	3	"	ATEC CTR
15	10	12	3	"	BACK-UP ATEC CTR
16	8	24†	4	FR. JCT. BOX	ALARM BUZZER & INSTRUMENT
17	10	24	4	"	ELECT. HORN
18	5	24	4	"	FIRE ALARM
19	5	12	4	"	12V VOLTMETER
20	5	24	4	"	FOG LT SW
21	15	12	4	"	FOG LT
22	20	12	4	"	HEADLAMP (HI)
23	15	12	4	"	HEADLAMP (LO)
24	5	24	5	"	HEAD LAMP SW & MULTI-FUNC. SW
25	10	24	5	"	MULTI-FUNC. SW. (WIPER, WASHER)
26	20	12	6	"	FLASHER & HAZARD UNIT
27	15	24	7	ENG. JCT. BOX	FRONT BAGGAGE LT.
28	15	12	5	CENT. JCT. BOX	REAR ID TAIL & LICENCE LT
29	8	12	5	"	REAR CLEARANCE LT
30	8	12	5	"	REAR TAIL & MARKER LT
31	5	12	5	"	LICENCE PLATE LT
32	15	12	5	"	STOP LT
33	5	24	7	FR. JCT. BOX	STOP LT SW
34	5	24†	7	"	PARK BRAKE SW.

CIRCUIT BREAKER					
CB#	AMP.	VOLT.	DIAG. PAGE	LOCATION	FUNCTION
35	8	12	7	FR. JCT. BOX	FR. CLEARANCE LT.
36	5	24	8	CENT. JCT. BOX	EXIT LAMP
37	8	12	7	FR. JCT. BOX	FR. SECTION MARKER LT.
38	15	24	7	CENT. JCT. BOX	RR BAG. COMP'T LT.
39	5	24	8	FR. JCT. BOX	" FR SERV. COMP'T LT.
40	5	110	9	ALARM JCT. BOX	110 V. FLUOR - RR
41	5	"	"	"	110 V. FLUOR. - FR. RH
42	15	24	"	ENG. JCT. BOX	FRONT FLUORESCENT (24V)
43	8	24	"	FR. JCT. BOX	HAT RACK LTS SW
44	15	"	"	ENG. JCT. BOX	FRONT READING LTS - RH.
45	15	"	"	"	" " " - LH.
46	8	"	"	CENT. JCT. BOX	REAR " " - RH.
47	8	"	"	"	" " " - LH
48	10	"	9	ENG. JCT. BOX	FRONT GENERAL LTS.
49	10	"	10	FR. JCT. BOX	DASH LT REOSTAT & U/SEAT LT.
50	8	"	"	"	DASH LT REOSTAT
51	10	"	"	"	U/SEAT LT
52	5	"	"	"	PASS. & HOSTESS CHIME SW
53	8	"	11	"	A/C & HEAT SW.
54	8	"	11	ENG. JCT. BOX	A/C LOGIC PANEL
55	5	24†	13	FR. JCT. BOX	DRIVER'S HTR FAN SW. IGN. CTR.
56	15	24	"	ENG. JCT. BOX	REAR WATER PUMP
57	15	"	"	"	FRONT WATER PUMP
58	8	"	"	"	A/C COMPR. CLUTCH & COND. FAN SOL.
59	90	"	"	"	FRONT EVAP. FAN MOTOR
60	40	"	"	F.E.F.M.	" " " " RH
61	40	"	"	"	" " " " LH
62	90	"	"	ENG. JCT. BOX	REAR EVAP. FAN MOTOR
63	40	"	"	R.E.F.M.	" " " " RH
64	40	"	"	"	" " " " LH
65	5	"	"	ENG. JCT. BOX	HUMIDISTAT CTR.
66	10	"	"	FR. JCT. BOX	DRIVER'S HTR FAN SW
67	8	24	14	"	REAR VIEW MIRROR
68	15	12	14	"	DRIV. WINDOW LIFTER & CIGAR LIG

PREVOST

LEGEND

FRONT JUNCTION PANEL	BATTERY JUNCTION BLOCK
REAR JUNCTION PANEL	SINGLE CONNECTOR
BATTERY COMPARTMENT	DIODE (RECTIFIER)
CIRCUIT BREAKER	OPTION
HARNESS CONNECTOR	

THIS DOCUMENT AND THE INFORMATION CONTAINED IN IT ARE THE SOLE PROPERTY OF PREVOST CAR INC. THIS DOCUMENT IS LOANED SUBJECT TO THE UNDERSTANDING THAT IT WILL NOT BE COPIED, REPRODUCED OR DISCLOSED TO OTHERS BY ANY PERSON OR COMPANY SAVE WITH THE EXPRESS CONSENT IN WRITING FROM PREVOST CAR INC.

ITEM	DATE	REVISION	PAR
D	88-05	CB41 & CB65 ETAIT 8A	MA
C	88-05	CB27, CB38 & CB39 ETAIENT 10A	MA
B	88-03	MISE A JOUR "FUNCTION"	B
A	88-03	ETAIT / J008	B.C.

DESC : CIRCUIT BREAKER CODE

APPL: EFF. W/ J009 ⚠ | REF: H5-60

DISS: D.T. | DATE - 88-02

VER. - | APPR. -

NO: D-060660 p. D1 | C

CIRCUIT BREAKER CODE

CIRCUIT BREAKER

CB#	AMP.	VOLT.	DIAG. PAGE	LOCATION	FUNCTION
69	5	24H	16	FR. JCT. BOX	TACHOGRAPH CLOCK
70	3	24i	16	"	LOW FUEL SENSOR & TT LT
71	8	24	16	CENT. JCT. BOX	TOILET PUMP
72	8	"	"	"	TOILET LTS
73	"	"	"	"	TOILET FAN
74	10	24i	17	FR. JCT. BOX	UPPER WIND. DEFROST
75	10	24	15	"	L.H. CONSOLE SWITCH
76	10	"	17	"	UPPER WIND WIPER & WASHER
77	8	"	18	"	RR & FR DOOR CONTROL
78	3	12i	3	"	RETARDER SW.
79	8	24	18	CENT. JCT. BOX	RR CTR DOOR
80	30	12	21	POWER JCT. BOX	SOUND SYSTEM
81	16	24	19	FR. JCT. BOX	FR E.C.U. ANTI SKID
82	16	"	19	"	" " "
83	5	"	19	"	" " "
84	70	12	1	ENG. JCT. BOX	CENTRAL JCT BOX
85	8	24i	8	ENG. JCT. BOX	HATRACK COMPT. LT.
86	5	24	21	FR. JCT. BOX	FEED KNEELING SYSTEM
87	5	24i	21	ENG. JCT. BOX	ARTICULATION SW
88	8	24	22	FR. JCT. BOX	ARTICULATION BRAKE
89	8	24i	"	ENG. JCT. BOX	AIR DRYER
90	5	"	22	FR. JCT. BOX	BACK UP MONITOR CONVERTER
91	8	24i	18	FR. JCT. BOX	SPEED LIMITER SW.
92	"	24i	22	FR. JCT BOX	DRIVER'S SEAT HEATER & DIG. THERM.
94	10	12	23	FR. JCT. BOX	LUGGAGE DOOR LOCK
95	15	12	24	"	RADIO
97	5	24	16	CENT. JCT. BOX	AISLE LTS.
98	10	12	7	"	BACK-UP LIGHT & BACK-UP ALARM
99	"	"	7	"	BACK-UP LT
100	8	24	9	"	GENERAL LT - REAR SECTION
101	5	"		"	24V FLUOR LT - REAR SECTION
102	5	12i	22	"	CAMERA HEATER
103	5	12	16	"	LAV. NIGHT LIGHT
105	5	110	9	ALARM JCT. BOX	110-V FLUORESCENT - FR. L.H.

CIRCUIT BREAKER

CB#	AMP.	VOLT.	DIAG. PAGE	LOCATION	FUNCTION
106	5	110	23	ALARM JCT. BOX	WATER HEATER TANK
107	20	110	23	"	ENGINE BLOCK HEATER
108	3	24	3	ENG. JCT. BOX	RETARDER ATEC CTR
109	10	12	6	FR. JCT. BOX	CORNERING LTS
110	15	12	24	"	AUDIO. AMPLI - FR. SECT.
111	15	12	24	"	" - RR SECT.
112	5	24	15	FR. JCT. BOX	FR. DESTINATION SIGN
113	20	24	23	CENT. JCT. BOX	LH LUGGAGE DOOR LOCK - RR
114	20	24	23	"	RH LUGGAGE DOOR LOCK - RR
115	25	24	23	ENG. JCT. BOX	FR. LUGGAGE DOOR LOCK
116	5	12	2	"	LOW COOLANT MODULE

D-060660 "C" p.D2

LEGEND

FRONT JUNCTION PANEL
REAR JUNCTION PANEL
BATTERY COMPARTMENT
CIRCUIT BREAKER
HARNESS CONNECTOR
BATTERY JUNCTION BLOCK
SINGLE CONNECTOR
DIODE (RECTIFIER)
OPTION

ITEM	DATE	REVISION	
C	88-05	CB85 ETAIT 5A	MJ
B	88-03	MISE À JOUR "FUNCTION"	B.C.
A	88-03	ETAIT /J008	BC

DESC: CIRCUIT BREAKER CODE

DESS: D.T. | DATE - 88-02 | VER. - | APPR. -

APPL: EFF. W/J009 △A | REF: H5-60 | NO: D-060660 p.D2 | C

M

CONNECTOR CODE

CONNECTOR

C#	LOCATION	DESIGNATION	NO. CAVITY
C1	FR. JCT. BOX COMPT.	FR. JCT. BOX TO INTERFACE HARNESS	24
C2	" " " "	" " " " " "	22
C3	" " " "	" " " " " "	37
C4	" " " "	" " " " " "	37
C5	" " " "	" " " " " "	37
C6	FR. SERVICE COMPT.- UNDERNEATH	FROM ARTICULATION TO INTERFACE HARNESS	37
C7	" " " "	" " " " " "	24
C8	" " " "	FROM ENGINE JCT BOX TO INTERFACE HARNESS	37
C9	" " " "	" " " " " "	16
C10			
C11			
C12	ARTICULATION	FROM FR. SERVICE COMPT TO ARTICULATION HARN.	24
C13	"	" " " " "	37
C14	"	FROM ENG. JCT BOX TO ARTICULATION HARN.	6
C15	"	" " " " "	24
C16	FR. SECT. LH HAT RACK - RR	FEED LH HAT RACK ACCESSORIES	9
C17	FR. SECT. RH HAT RACK - RR	FEED RH HAT RACK ACCESSORIES	9
C18			
C19			
C20			
C21			
C22	" " "	" " " " "	37
C23			
C24			
C25	ENGINE JCT. BOX - ENGINE COMPT.	ENG. JCT. BOX TO ENGINE CRADLE HARNESS	35
C26	" " " " "	" " " " "	47
C27			
C28	ENGINE JCT. BOX - ENGINE COMPT.	ENG. JCT. BOX TO ENGINE CRADLE HARNESS	26
C29	" " " " "	ENG. JCT. BOX TO ENGINE COMPT. HARNESS	22
C30			
C31	ENGINE JCT. BOX	FROM FR. SERVICE COMPT. TO ENGINE JCT. BOX	16
C32	" " "	ENG. JCT. BOX TO LUGGAGE COMPT. LTS.	22
C33			
C34			
C35			
C36			
C37			
C38			

-CONNECTOR

C#	LOCATION	DESIGNATION	NO. CAVITY
C39	FR. SECT. LH HAT RACK - RR	FEED LH SPEAKER	2
C40	FR. SECT. RH HAT RACK - RR	FEED RH SPEAKER	2
C41	FR. SECT. RH HAT RACK - RR	FEED RH 110V FLUORESCENT	2
C42	FR. SECT. LH HAT RACK - RR	FEED LH 110V FLUORESCENT	2
C43			
C44	FR. JCT BOX COMPT.	ANTI-SKID E.C.U. MODULE	35
C45	ALARM JCT BOX COMPT.	FEED FR. ROOF ACCESSORIES	24
C46	FR. SERVICE COMPT.	FEED FR. SERVICE COMPT. ACCESSORIES	24
C47	FR. SERVICE COMPT.	FEED HEAD & FOG LAMP	7
C48	FR. AXLE	FEED FR. AXLE ACCESSORIES	22
C49	ALARM JCT BOX COMPT.	FEED INSTRUMENT PANEL	37
C50	" " " "	" " "	37
C51	" " " "	" " "	24
C52			
C53			
C54	UNDER DASH - LH CORNER	FEED P.A. UNIT	3
C55	UNDER DASH - CENTER	FEED RH SW. PANEL	9
C56	" " " "	FEED RH CONSOLE	24
C57	" " " "	FEED UNDER DASH ACCESSORIES - RH	22
C58	FR JCT BOX COMPT.	OPTION SLIP DRIVE CONTROL	3
C59	LH CONSOLE	CRUISE ON OFF SW.	8
C60	" "	CRUISE SET SW.	8
C61	" "	CRUISE RESUME SW.	8
C62			
C63			
C64			
C65			
C66			
C67			
C68	ALARM JCT BOX	ALARM JCT. BOX TO INTERFACE HARNESS	16
C69	" " "	FEED DASH INSTRUMENT PANEL	16
C70	" " "	FEED LH CONSOLE	24
C71	UNDER INSTRUMENT PANEL - LH	FEED INSTRUMENT PANEL - LH	37
C72	UNDER INSTRUMENT PANEL	FEED CENTRAL INSTRUMENT PANEL	37
C73	" " "	" " " "	16
C74			
C75	ALARM JCT BOX COMPT.	FEED FR. ROOF ACCESSORIES	22
C76	FR. SERVICE COMPT.	FROM ENGINE JCT. BOX TO WTERFACE HARNESS	14

LEGEND

FRONT JUNCTION PANEL
REAR JUNCTION PANEL
BATTERY COMPARTMENT
CIRCUIT BREAKER
HARNESS CONNECTOR

BATTERY JUNCTION BLOCK
SINGLE CONNECTOR
DIODE (RECTIFIER)
OPTION

THIS DOCUMENT AND THE DATA CONTAINED HEREIN IS PROPRIETARY TO DIVCO INC. AND SHALL NOT BE REPRODUCED OR TRANSFERRED TO OTHER DOCUMENTS OR DISCLOSED TO OTHERS OR USED FOR MANUFACTURING PURPOSES WITHOUT THE EXPRESS WRITTEN PERMISSION OF DIVCO INC.

ITEM	DATE	REVISION	PAR
A	88-03	ETAIT /J008	B.C.

DESC: CONNECTOR CODE

DESS: D.T. | DATE- 88-02 | VER.- | APPR.-

APPL: EFF. W/J009 (A) | REF: H5-60 | NO: D-060660 p. E1 | C

M

CONNECTOR CODE

CONNECTOR			
C#	LOCATION	DESIGNATION	NO. CAVITY
C77	FR. SERVICE COMPT.	FEED FR. SERVICE COMPT. ACCESSORIES	16
C78			
C79	DRIVE AXLE	FEED DRIVE AXLE ACCESSORIES	22
C80	ENGINE JCT BOX COMPT.	FROM ARTICULATION TO ENGINE JCT. BOX	14
C81	" " " "	ELECTRONIC CONTROL MODULE ENGINE	30
C82	" " " "	" " " "	30
C83	" " " "	ELECTRONIC CONTROL UNIT (TRANSMISSION)	30
C84	" " " "	" " " "	30
C85	FR. JCT BOX COMPT.	SPEED LIMITE SW.	9
C86	FR. SERVICE COMPT.	SIDE FLASHER RH	2
C87	" " "	SIDE MARKER	2
C88	" " "	DRIVER'S LIQUID SOL. VALVE	2
C89	" " "	DRIVER'S WATER VALVE	2
C90	" " "	THROTTLE POSITION SENSOR	3
C91	" " "	INSTRUMENT PANEL RHEOSTAT	2
C92	" " "	AIR RETURN SENSOR	2
C93	" " "	SIDE FLASHER LH	2
C94	" " "	BRAKE INTERLOCK SOL. VALVE	2
C95	" " "	FRESH AIR DAMPER SOL. VALVE	2
C96	" " "	ELECTRICAL HORN	2
C97	" " "	BELLOWS CTR. VALVE	2
C98	" " "	EXHAUST CTR. SOL. VALVE	2
C99	" " "	STEERING COMPT. LTS	2
C100	CENTRAL JCT. BOX	CENTRAL JCT BOX TO RR SERVICE COMPT.	22
C101	RR SERVICE COMPT.	FEED RR LOWER LAMP	16
C102	" " "	FEED RR ROOF ACCESSORIES	22
C103	" " "	FEED RR SERVICE COMPT. ACCESSORIES	24
C104	RR AXLE ACCESSORIES	FEED RR AXLE ACCESSORIES	22
C105	ARTICULATION	FROM ARTICULATION TO RR SERVICE COMPT.	14
C106	RR END LH SIDE	RR LH LOWER LAMP	9
C107	RR END CENTER	CYCLOP LT.	2
C108	" " "	LICENCE PLATE LT.	2
C109	RR END RH SIDE	RR RH LOWER LAMP	9
C110	RR SERVICE COMPT.	RR JCT BOX	24
C111	RR SECT. LH HAT RACK - FR.	FEED LH HAT RACK ACCESSORIES	9
C112	RR SECT. RH HAT RACK - FR.	FEED RH HAT RACK ACCESSORIES	9
C113	RR SECT. LH HAT RACK - FR.	FEED LH SPEAKER	4
C114	RR & FR LH HAT RACK	FOR READING LTS	2

CONNECTOR			
C#	LOCATION	DESIGNATION	NO CAVITY
C115	HAT RACK	FLUORESCENT	4
C116	" "	BALLAST DISTRIBUTION	6
C117	" "	BALLAST FEEDING	4
C118	" "	FEED GENERAL & HAT RACK LTS	3
C119	" "	FLUORESCENT	4
C120	" "	BALLAST DISTRIBUTION	6
C121	RR SECT. RH HAT RACK - FR.	FEED 110-V FLUOR.	2
C122	" " " " " "	FEED SPEAKER	4
C123	RR & FR. RH HAT RACK	READING LTS	2
C124	CENTRAL JCT. BOX	FROM CENTRAL JCT. BOX TO RR RH HAT RACK	24
C125			
C126	CENTRAL JCT. BOX	FROM CENTRAL JCT. BOX TO RR LH HAT RACK	24
C127	ARTICULATION	RR DIGITAL THERMOMETER FEEDING	3
C128			
C129	CENTRAL JCT. BOX	FROM CENTRAL JCT. BOX TO LUGGAGE COMPT.	24
C130			
C131	CENTRAL JCT. BOX	FROM CENTRAL JCT. BOX TO ARTICUL. HARN.	6
C132	" " "	" " " " "	24
C133	" " "	" " " " "	37
C134	" " "	" " " " "	16
C135			
C136	CENTRAL JCT. BOX	FROM CENTRAL JCT. BOX TO RR SERVICE COMPT.	16
C137	RH CONSOLE	RR DIGITAL THERMOMETER	2
C138	AISLE RR STEP WELL	AIR RETURN SENSOR	2
C139	LH & RH ROOF ARTICULATION	FEED EMERGENCY EXIT LTS	2
C140	RR SECT. LH HAT RACK - FR.	FEED 110-V FLUOR.	2
C141	FR. SERVICE COMPT.	KNEELING LT	2
C142	RH CONSOLE	FR. DIGITAL THERMOMETER	2
C143	FR. LUGGAGE COMPT.	" " " SENSOR	2
C144	ARTICULATION - LH	RR DIGITAL THERMOMETER SENSOR	2
C145	RR SECT. LUGGAGE COMPT. - RH	LUGGAGE LTS	2
C146	" " " " "	" "	2
C147	" " " " "	FEED LUGGAGE DOOR LOCK	6
C148	" " " " "	LUGGAGE LTS	2
C149	" " " " "	FEED LUGGAGE DOOR LOCK	6
C150	" " " " "	LUGGAGE LTS	2
C151	" " " " "	AIR RETURN SENSOR	2
C152	" " " " "	FEED LUGGAGE DOOR LOCK	6

PREVOST

LEGEND

FRONT JUNCTION PANEL	BATTERY JUNCTION BLOCK
REAR JUNCTION PANEL	SINGLE CONNECTOR
BATTERY COMPARTMENT	DIODE (RECTIFIER)
CIRCUIT BREAKER	OPTION
HARNESS CONNECTOR	

CE DOCUMENT EST LA PROPRIETE EXCLUSIVE DE PREVOST CAR INC. TOUS DROITS RESERVES. IL NE PEUT ETRE UTILISE OU REPRODUIT, EN TOUT OU EN PARTIE, SANS L'AUTORISATION ECRITE DE PREVOST CAR INC.

THIS DOCUMENT IS THE EXCLUSIVE PROPERTY OF PREVOST CAR INC. ALL RIGHTS RESERVED. THIS DOCUMENT SHALL NOT BE USED OR REPRODUCED, EITHER IN WHOLE OR IN PART, NOR SHALL ITS CONTENT BE DISCLOSED TO OTHERS BY ANY PERSON OR COMPANY SAVE WITH THE EXPRESS CONSENT IN WRITING FROM PREVOST CAR INC.

ITEM	DATE	REVISION	BY
A	88-03	ETAIT /J008	B.C

DESC: CONNECTOR CODE

DESS: D.V. | DATE: 88/02 | VER.: | APPR.:

APPL: EFF. W/J009 ⚠ | REF: H5-60 | NO: D-060660 p. E2 | C

CONNECTOR CODE

CONNECTOR			
C#	LOCATION	DESIGNATION	NO. CAVITY
C153	RR SECT. LUGGAGE COMPT. LH	LUGGAGE LTS	2
C154	" " " " "	AIR AMBIENT SENSOR	2
C155	" " " " "	LUGGAGE LTS	2
C156	" " " " "	FEED LUGGAGE DOOR LOCK	6
C157	" " " " "	LUGGAGE LTS	2
C158	" " " " "	FEED LUGGAGE DOOR LOCK	6
C159	" " " " "	LUGGAGE LTS	2
C160	" " " " "	AIR RETURN SENSOR	2
C161	" " " " "	LUGGAGE DOOR LOCK	6
C162	RR SECT. LUGGAGE COMPT.	ST1 WATER VALVE	2
C163	" " " "	ST2 WATER VALVE	2
C164	" " " "	ST3 WATER VALVE	2
C165	" " " "	LIQUID SOLENOID VALVE	2
C166	" " " "	FEED WATER VALVE	9
C167	RR END ROOF	CLEARANCE LTS	2
C168	" " "	WATCH YOUR STEP	2
C169	" " "	LAVATORY OCCUPIED SW.	2
C170	RR SECT. UNDER LH SEAT	FEED. LH UNDER SEAT ACCESSORIES	4
C171	" " " " "	ACCELEROMETER	2
C172	" " " " "	AISLE LTS	2
C173	" " " " "	RUNNING LTS	2
C174	UNDER DASH - RH	DRIVER'S HTR SPEED CTR MODULE	9
C175	" " "	" " " "	9
C176	" " "	LOWER WIND. WIPER PULSE GENERATOR	6
C177	" " "	LOWER WINDSHIELD WIPER MOTOR	6
C178	" " "	DRIVER'S HTR & DEFROSTER LH FAN	2
C179	" " "	" " " RH "	2
C180	RR END ROOF - CENTER	CAMERA	4
C181	" " " - LH	LAVATORY FLUORESCENT	2
C182	" " " - LH	WATER TANK HEATER	3
C183	RR SERVICE COMPT.	SIDE MARKER	2
C184	" " "	SIDE DIRECTIONNAL LTS LH	2
C185	" " "	FRESH AIR DAMPER SOL. VALVE	2
C186	" " "	FRESH AIR SENSOR	2
C187	" " "	CAMERA DOOR SOLENOID	2
C188	" " "	CAMERA DOOR CTR. SW.	4
C189	" " "	LAVATORY PUMP	2
C190	" " "	BACK-UP ALARM	2

CONNECTOR			
C#	LOCATION	DESIGNATION	NO. CAVITY
C191	RR SERVICE COMPT	TOILET VENTILATION	2
C192	" " "	SIDE DIRECTIONNAL LTS - RH	2
C193			
C194	ARTICULATION	ARTICULATION PHONE	4
C195	ARTICULATION	ANTI - JACK SYSTEM	2
C196	ENGINE JCT BOX	RED LED INDICATOR - FR. SECT. (HTR)	2
C197	" " "	" " " - RR. SECT. (HTR)	2
C198	" " "	GREEN LED INDICATOR - FR. SECT. (A/C)	2
C199	" " "	" " " - RR. SECT. (A/C)	2
C200	FR. SECT. HAT RACK	FLUORESCENT	4
C201	" " " "	"	4
C202	" " " "	BALLAST FEEDING	4
C203	" " " "	BALLAST DISTRIBUTION	6
C204	" " " "	FEED GENERAL & HAT RACK LTS	3
C205	FR. SECT. RH HAT RACK - FR.	SPEAKER	1
C206			
C207			
C208	FR. SECT. - LH HAT RACK	BALLAST FEEDING	4
C209	" " " " "	READING LTS	2
C210	FR. SECT. LH HAT RACK - FR.	SPEAKER	4
C211	FROUT ROOF	DRIVER'S STORE - LH	2
C212	" "	DRIVER'S STORE - RH	2
C213	" "	CLEARANCE LTS	2
C214	" "	AMPLIFIER RH SPEAKER CONNECTION	2
C215	" "	" LH " "	2
C216	UNDER DASH - LH CORNER	P.A. DISTRIBUTION	9
C217	" " " "	P.A. MICRO OUTLET	3
C218	" " " "	P.A. VOLUME	3
C219	" " " "	P.A. DRIVER'S SPEAKERS CONNECTION	4
C220	" " " "	P.A. AMPLIFIER CONNECTION	7
C221	" " " "	P.A. RADIO CONNECTION	7
C222	ALARM JCT BOX COMPT.	MICRO OUTLET	4
C223	" " " "	DRIVER'S SPEAKERS FEEDING	4
C224	RH SWITCH PANEL	RADIO	7
C225			
C226	FR. ROOF - LH	AMPLIFIER	7
C227	RH SWITCH PANEL	SPEAKER SELECTOR SW.	8
C228	" " "	MICRO OUTLET	4

LEGEND

REV	DATE	REVISION	PAR
C	91-02	MISE À JOUR	MC
B	89-02	O.C. 89033, C.D. 9/6/82	RB
A	88-03	ETAIT W008	B.C

DESC: CONNECTOR CODE

DESS: D.T. DATE - 88/02

VER. - C APPR. -

APPL: EFF W009 ⚠ PRIOR L033 REF: H5-60

N°: D-060660 RE3 C

CONNECTOR CODE

CONNECTOR			
C*	LOCATION	DESIGNATION	NO. CAVITY
C225	RH SWITCH PANEL	P.A. VOLUME CONTROL	4
C230	" " "	LH DRIVER'S SPEAKER	2
C231	" " "	RADIO FEEDING	4
C232	" " "	RH DRIVER'S SPEAKER	2
C233	FR. SECTION ARTICULATION	ARTICULATION VERTICAL SAFETY SW.	2
C234	" " "	ARTICULATION HORIZONTAL SAFETY SW.	6
C235	" " "	LOW COOLANT SENSOR	3
C236			
C237	FR. SECT. UNDER SEAT - LH	AISLE LTS FEEDING	2
C238	" " " " "	AISLE LTS	2
C239	FR. AXLE	FUEL TANK LEVEL GAUGE	4
C240	" "	KNEELING SW.	2
C241	FR. SERVICE COMPT.	FOG RESISTOR BOX	3
C242	" " "	FR. L.H. MARKER & DIRECT. LT.	3
C243	" " "	HEADLAMPS	3
C244	" " "	L.H. FOG LAMP	2
C245	" " "	R.H. FOG LAMP	2
C246	" " "	FR. R.H. MARKER & DIRECT. LT.	3
C247			
C248	ALARM JCT. BOX	UPPER WIND. WIPER PULSE GENERATOR	12
C249	" " "	CONVERTER 12V TO 5V (R/V MONITOR)	3
C250	" " "	DASH LTS REGULATOR CTR	6
C251	LT SWITCH PANEL	FAST IDLE SW.	8
C252	" " "	SWITCH LTS.	2
C253	" " "	ETHER SW.	8
C254	" " "	WEBASTO SW.	8
C255	" " "	RETARDER SW.	8
C256			
C257			
C258	LT SWITCH PANEL	MULTI - FUNCTION SW.	8
C259	" " "	MULTI - FUNCTION SW.	6
C260	INSTR. PANEL - CENTER PLATE	TACHOGRAPH HEAD RPM	4
C261	" " " "	TACHOGRAPH HEAD ANTI-JACK	4
C262	" " " "	TACHOGRAPH HEAD FEEDING	4
C263	" " " "	TACHOGRAPH HEAD SPEEDO	4
C264	" " " "	ENGLER TACHO HEAD	6
C265	" " " "	ENGLER SPEEDO HEAD	6
C266	ENGINE CRADLE	MANUAL TRANSMISSION ACCES.	4

CONNECTOR			
C*	LOCATION	DESIGNATION	NO. CAVITY
C267	ENGINE CRADLE	SPEED SENSOR	3
C268	" "	RPM SENSOR	3
C269	ENGINE CRADLE	JACOB L.H. BANK BRAKE	1
C270			
C271	ENGINE CRADLE	JACOB R.H. BANK BRAKE	1
C272			
C273	ENGINE CRADLE	MOTOR BLOCK HEATER	3
C274			
C275	" "	ODEC OPTION	4
C276	" "	CONDENSER FAN SOL. VALVE	2
C277	ENGINE CRADLE	RACOR FUEL FILTER	2
C278	" "	WEBASTO	6
C279	" "	FR. WATER PUMP	2
C280	" "	FR. ST3 WATER VALVE	2
C281	" "	FR. ST2 WATER VALVE	2
C282	" "	FR. ST1 WATER VALVE	2
C283	" "	ATEC SPEED SENSOR	2
C284	" "	ATEC THROTTLE SENSOR N/A	3
C285	" "	ATEC TRANSMISSION	23
C286	RH SWITCH PANEL	A/C & HEAT SW.	1
C287	" " "	A/C FAN ONLY	1
C288	" " "	FRESH AIR SW.	1
C289	" " "	SWITCH LTS	2
C290	FR. A/C UNIT	A/C VARIATOR SPEED CONTROL	3
C291	FR. SECTION LUGGAGE COMPT.	LUGGAGE LTS	2
C292	" " "	" "	2
C293	" " "	" "	2
C294	" " "	" "	2
C295	" " "	AIR AMBIENT SENSOR	2
C296	" " "	LUGGAGE LTS	2
C297	FR SECTION LUGGAGE COMPT.	AIR RETURN SENSOR	2
C298	" " " "	" " "	2
C299	" " " "	LUGGAGE LTS	2
C300	" " " "	FRESH AIR SENSOR	2
C301			2
C302	FR. SECTION LUGGAGE COMPT.	LIQUID SOLENOID VALVE	2
C303	" " " "	LUGGAGE DOOR LOCK FEEDING	6
C304	" " " "	" " " "	6

PREVOST

LEGEND

	FRONT JUNCTION PANEL		BATTERY JUNCTION BLOCK
	REAR JUNCTION PANEL		SINGLE CONNECTOR
	BATTERY COMPARTMENT		DIODE (RECTIFIER)
	CIRCUIT BREAKER		OPTION
	HARNESS CONNECTOR		

REV	DATE	REVISION	
A	91-02	MISE A JOUR	MJ
A	88-03	ETAIT /J008	&C.

DESC: CONNECTOR CODE

DESS: D.T. DATE- 88/02

VER.- APPR.-

APPL: EFF. W/J009 ⚠ PRIOR L033 REF: H5-60 NO: D-060660 R E4

M

CONNECTOR CODE

CONNECTOR			
C#	LOCATION	DESIGNATION	NO. CAVITY
C 305	FR SECTION LUGGAGE COMPT.	LUGGAGE DOOR LOCK FEEDING	6
C 306	" " " "	" " " "	6
C 307	LH. CONSOLE	DRIVER'S SEAT HEATER	4
C 308	" "	DASH LT. RHEOSTAT	
C 309	" "	GALLEY SW.	8
C 310	" "	LUGGAGE DOOR LOCK SW.	8
C 311	" "	HOSTESS & PASS. CHIME SW.	8
C 312	" "	READING LT. SW.	8
C 313	" "	GENERAL LT. & 24V FLUOR. SW.	8
C 314	" "	FR. DESTINATION SIGN SW.	8
C 315	" "	L.H. STORE SW.	8
C 316	ENGINE COMPT.	ETHER QUICKSTART VALVE	2
C 317	LH CONSOLE	R.H. STORE SW.	8
C 318	" "	DRIVER'S WINDOW LIFTER	
C 319	" "	DRIVER'S SEAT HEATER SW.	8
C 320	" "	DRIVER'S LT. SW.	8
C 321	" "	SHIFTER SELECTOR	16
C 322	" "	DRIVER'S WINDOW LIFTER MOTOR	2
C 323	" "	CRUISE CONTROL SW. PANEL	14
C 324	" "	ARTICULATION BRAKE SW.	8
C 325	" "	KNEELING SW.	8
C 326	" "	RR. & FR. ENTRANCE DOOR SW.	8
C 327	ENGINE COMPT.	ENGINE CONTROL SWITCHES	9
C 328	" "	WATER PUMP	2
C 329	" "	SERVICE LTS.	1
C 330	ENGINE COMPT. - AT A/C COMPR.	UNDER LOADER SOL. VALVE	2
C 331	" " " "	" " " "	2
C 332	" " " "	A/C COMPR. CLUTCH	2
C 333	" " " "	A/C LO-PRESSURE SW.	2
C 334	" " " "	A/C HI-PRESSURE SW.	2
C 335	ENGINE COMPT.	RETARDER SOL. VALVE	2
C 336	INSTRUMENT PANEL - LH SECT.	INSTRUMENT & SW. LTS	
C 337	" " "	UPPER WIND. WIPER MOTOR CONTROL SW.	8
C 338	" " "	UPPER WINDSHIELD DEFROST SW.	8
C 339	" " "	UPPER WINDSHIELD WASHER CTR. SW.	8
C 340	" " "	L.H. MIRROR ADJUSTING SW.	8
C 341	" " "	HEATED MIRROR SW.	8
C 342	" " "	R.H. MIRROR ADJUSTING SW.	8

CONNECTOR			
C#	LOCATION	DESIGNATION	NO. CAVITY
C 343	INSTRUMENT PANEL - LH. SECT.	HEADLAMP SW.	8
C 344	" " " "	HAZARD WARNING LTS SW.	8
C 345	" " "	FOG LT. SW.	8
C 346	" " " "	SWITCH LTS.	2
C 347	" " " "	DASH LT. SW.	2
C 348	INSTRUMENT PANEL - CENTER	RACOR FILTER T.T. LT. MODULE	6
C 349	R.H. CONSOLE	RED LED INDICATOR - FR. SECT. (HTR)	2
C 350	" "	DIGITAL THERMOMETER	3
C 351	" "	RED LED INDICATOR - RR. SECT. (HTR)	2
C 352	" "	DRIVER'S TEMP. CONTROL SENSOR	3
C 353	INSTRUMENT PANEL - RH	DRIVER'S HTR. FAN SPEED CTR. RHEOSTAT	6
C 354	" " "	DRIVER'S TEMP. CONTROL	6
C 355	" " "	FRONT TEMP. CONTROL	3
C 356	" " "	REAR TEMP. CONTROL	3
C 357	" " "	WATER TEMP. GAUGE	3
C 358	" " "	FUEL LEVEL GAUGE	3
C 359	" " "	INSTRUMENT PANEL LIGHTING	2
C 360	" " "	B/U MONITOR	2
C 361	FR. ROOF	UPPER WIPER MOTOR	6
C 362	" "	LAVATORY OCCUPIED SIGN	2
C 363	" "	WATCH YOUR STEP SIGN	2
C 364	" "	FR. DESTINATION SIGN	3
C 365	" "	UPPER WINDSHIELD DEFROST	3
C 366	R.H. CONSOLE	GREEN LED INDICATOR - FR. SECT. (A/C)	2
C 367	" "	GREEN LED INDICATOR - RR. SECT. (A/C)	2
C 368	ENG. JCT. BOX	HI & LO PRESS N/C	6
C 369	ALARM JCT. BOX CPT.	FEED L.H. SW. PANEL	6
C 370	FR. SERVICE COMPT. - UNDERNEATH	FROM ARTICULATION TO INTERFACE HARNESS	37
C 371	FR. SERVICE COMPT.	FROM ENGINE JCT. BOX TO INTERFACE HARNESS	16
C 372	ENGINE JCT. BOX	FROM FR. SERVICE COMPT. TO ENGINE JCT BOX	37
C 373	" " "	" " " " "	16
C 374	ALARM JCT. BOX	ALARM JCT. BOX TO INTERFACE HARNESS	37
C 375	ALARM JCT. BOX COMPT.	FEED LH CONSOLE	37
C 376	" " " "	FEED LH SW. PANEL	37
C 377	LT. SWITCH PANEL	STOP ENGINE OVERRIDE SW.	8
C 378	FR. SERVICE COMPT.	FEED FR. SERVICE COMPT. ACCES.	16
C 379	ARTICULATION	FR. COMPT. TO ENGINE COMPT.	24
C 380	"	FEED ARTICULATION ACCES.	22

CONNECTOR CODE

CONNECTOR			
C#	LOCATION	DESIGNATION	NO. CAVITY
C381	ENGINE JCT BOX	FROM ARTICULATION TO ENGINE JCT. BOX	24
C382	ALARM JCT BOX	DIAGNOSTIC DDEC II & ATEC	12
C383	ENGINE JCT BOX	ATEC & DDEC II - INTERFACE MODULE	3
C384	" " "	" " " "	1
C385	" " "	HARNESS No 1 TO No 2	37
C386	" " "	LOW COOLANT MODULE	6
C387	" " "	ATEC & DDEC II - INTERFACE MODULE	6
C388	" " "	" " " "	2
C389	INSTR. PANEL - CENTER PLATE	TACHO. & SPEEDO. DASH LTS	2
C390	ENGINE CRADLE	RPM SENSOR	2

CONNECTOR			
C#	LOCATION	DESIGNATION	NO. CAVITY

PREVOST — LEGEND

- FRONT JUNCTION PANEL
- REAR JUNCTION PANEL
- BATTERY COMPARTMENT
- CIRCUIT BREAKER
- HARNESS CONNECTOR
- BATTERY JUNCTION BLOCK
- SINGLE CONNECTOR
- DIODE (RECTIFIER)
- OPTION

THIS DOCUMENT IS THE EXCLUSIVE PROPERTY OF PREVOST CAR INC. STE-CLAIRE, QUE., AND MAY NOT BE USED, OR REPRODUCED, AND ITS CONTENT OR PART THERE OF DISCLOSED TO OTHERS BY ANY PERSON OR COMPANY SAVE WITH THE EXPRESS CONSENT IN WRITING FROM PREVOST CAR INC.

ITEM	DATE	REVISION	PAR
C	88-10	C389 & C390 AJOUTES	MJ
B	88-05	C387 & C388 AJOUTES	MJ
A	88-03	ETAIT /J008	B.C.

DESC: CONNECTOR CODE

DESS: D.T. | DATE: 88-02 | VER.- | APPR.-

APPL: EFF. W/J009 △ | REF: H5-60 | NO: D-060660 p. E6 | C

DIODE CODE

DIODE					
D#	AMP.	VOLT.	DIAG. PAGE	LOCALISATION	FONCTION
1		24	4	FR. JCT. BOX	LO-AIR SEC.
2		24	4	"	LO-AIR PRIM.
3		"	5	"	HEAD LAMP CTR
4		24	1	ENG. JCT. BOX	NEUTRAL GROUND
5		"	9	ENG. JCT. BOX	RR ELECTRONIC TRANSMITTER
6		"	12	"	A/C CTR MODUL - REAR
7		"	10	"	FR ELECTRONIC TRANSMITTER
8		"	12	"	A/C CTR MODUL - REAR
9		"	12	"	" " " "
10		"	11	"	A/C CTR
11		"	11	FR. JCT. BOX	" "
12		"	11	"	" "
13		"	16	CENT. JCT. BOX	TOILET
14		"	18	FR. JCT. BOX	REAR & FRONT CTR DOOR
15		"	18	"	" " " "
16		"	18	"	" " " "
17		"	21	"	KNEELING CTR
18		"	21	"	" "
19		"	21	"	" "
20		12	21	ENG. JCT. BOX	ARTICULATION SW # 3
21		24	13	"	FAN A/C ONLY
22		24	5	FR. JCT. BOX	HAZARD - FLASHER RH.
23		24	5	"	" " LH.
24		24	5	"	(BRAKE TT LT) SW.
25		24	5	"	(FASTIDLE SW) STOP SW.
26		24	13	ENG. JCT. BOX	FAN A/C ONLY
29		24	22	CENT. JCT. BOX	ARTICULATION BRAKE SYSTEM
31		24	22	CENT. JCT. BOX	ARTICULATION BRAKE SYSTEM
32	20	24	23	ENG. JCT. BOX	LUGGAGE DOOR LOCK FR.
33	20	24	23	"	" " " "
34	20	24	23	CENT. JCT. BOX	LUGGAGE DOOR LOCK RR
35	20	24	23	"	" " "
36	20	24	23	"	" " "
37	20	24	23	"	" " "
38	3	24	5	FR. JCT. BOX	BACK-UP CORNERING "SPECIAL VOYAGEUR"

DIODE					
D#	AMP.	VOLT.	DIAG. PAGE	LOCALISATION	FONCTION
39	3	12	5	FR. JCT. BOX	BACK-UP CORNERING "SPECIAL VOYAGEUR"
40	3	12	5	"	" " " "
41	3	24	5	"	" " " "
42					
43					
44					
45					
46					
47					
48					
49					
50					
51					
52	3	24	11A	R.H SW PANEL	FRESH AIR CONTROL

PREVOST — LEGEND

- FRONT JUNCTION PANEL
- REAR JUNCTION PANEL
- BATTERY COMPARTMENT
- CIRCUIT BREAKER
- HARNESS CONNECTOR
- BATTERY JUNCTION BLOCK
- SINGLE CONNECTOR
- DIODE (RECTIFIER)
- OPTION

ITEM	DATE	REVISION	PAR
F	91-02	MISE A JOUR	MJ
E	89-09	D38 & D41 AJOUTES OC# 89162	MJ
D	89-02	O.C.# 89033, C.D.# 16183	Rib
C	89-01	D32 & D37 AJOUTE OC# 89012	MJ
B	88-03	D-4 AJOUTÉ	MJ
A	88-03	ETAIT /J008	BC

DESC: DIODE CODE

DESS: D.T. — DATE- 88-02

VER.- C — APPR.- [illegible]

APPL: EFF. W/J009 ⚠ PRIOR L033 — REF: H5-60 — NO: D-060660 F — C

RELAYS CODE

R#	DIAG. PAGE	VOLT COIL	AMP	CATEGORY	LOCALISATION	FUNCTION
74	5	24	20	CUBIC N.O.	FR. JCT. BOX	BACK-UP CORNERING SPECIAL VOYAGEUR
75	5	24	20	"	"	" " "
76	18A	12	30	CUBIC N.O.	RR SERVICE R.H. COMPT.	RR STEP LTS "
77	18A	12	30	"	UNDER DASH R.H	FR STEP LTS "

RELAYS CODE

R#	DIAG. PAGE	VOLT COIL	AMP	CATEGORY	LOCALISATION	FUNCTION

PRINCOSTA LEGEND

FRONT JUNCTION PANEL
REAR JUNCTION PANEL
BATTERY COMPARTMENT
CIRCUIT BREAKER
HARNESS CONNECTOR

BATTERY JUNCTION BLOCK
SINGLE CONNECTOR
DIODE (RECTIFIER)
OPTION

REV	DATE	REVISION	PAR
A	89/09	LANCE OC# 89162	ML

TITLE: RELAYS CODE

DESS: M.L DATE- 89/09
VER.- C APPR.-
APP.: EFF. W/J009 PRIOR L033 REF: H5-60
NO: D-060660 P.G2 C

RELAYS CODE

RELAYS

R*	DIAG. PAGE COIL	DIAG. PAGE CONT'T	AMP	CATEGORY	VOLT. COIL	LOCATION	FUNCTION
1	1	4	200	MAGNETIC N.O.	24	FR. JCT. BOX	ENGINE RUN (24 V)
2	1	1	20	CUBIC N.O.	"	ENG. JCT. BOX	" " (24 V)
3	1	16	10	" N.C.	"	CENT. JCT. BOX	" " (24 V)
4	1	1	200	MAGNETIC N.O.	"	ENG. JCT. BOX	STARTING MOTOR
5	1	11	20	CUBIC N.C.	12	FR. JCT. BOX	BLOWER CUT IN
6	2	2	20	" N.O.	24	ENG. JCT. BOX	BRAKE SW CRUISE CTR.
7	2	2	10	" N.C.	"	"	FAST IDLE DDEC CTR
8	3	3	10	" "	"	"	CUT IN 12V ATEC
9	3	3	20	" N.O.	"	"	CHECK TRANSM ATEC
10	3	3	20	" "	"	"	BACK UP ATEC SIGNAL
Ⓔ 11	3	3	30	" "	"	"	RETARDER ATEC
12	4	4	20	" "	24	FR. JCT. BOX	ELECTRICAL HORN
13	4	4	20	" "	"	"	FRONT FOG LT
14	5	4	20	" "	"	"	HEADLAMPS CONTROL
15	5	4	20	" "	"	"	HEADLAMPS (HI)
16	5	4	20	" "	"	"	" (Lo)
17	5	7	20	" "	"	"	FRONT CLEARANCE LT
18	5	10	20	" "	"	"	U/SEAT LT & DASH RHEOSTAT
19	5	6	20	" "	"	"	RH. DIRECTIONAL LT
20	5	6	20	" "	24	"	LH. " "
21	5	5	10	" N.C.	"	"	BLINKER
22	5	5	20	" N.O.	"	CENT. JCT. BOX	RR CLEAR MARKER & LIC. LT
23	7	5	20	" "	"	"	STOP LT
24	9	9	20	" "	"	ENG. JCT. BOX	FRONT FLUORESCENT (24V)
25	9	9	20	" "	"	"	FRONT READING LTS
26	9	9	20	" "	"	CENT. JCT. BOX	REAR " "
27	9	9	20	" "	"	ENG. JCT. BOX	GENERAL LTS
28	9	9	20	" "	24	"	A/C LOGIC PANEL
29	11	13	20	" "	"	"	REAR WATER PUMP
30	15	11	20	" "	"	"	REAR ELECTRONIC TRANSMIT.
31	12	13	10	" N.C.	"	"	FRONT WATER PUMP
32	13	12	20	" N.O.	"	"	FRONT ELECTRONIC TRANSMIT.
33					"		
34	12	13	20	CUBIC N.O.	"	ENG. JCT. BOX	A/C COMPRESSOR CLUTCH
35	12	13	20	" "	"	"	COND. FAN SOL. VALVE
1A	1	22	20	" "	24	FR. JCT. BOX	12V IGNITION - FR.
2A	1	1	20	" "	"	ENG. JCT. BOX	12V IGNITION - ENG.
3A	1	22	20	" "	"	CENT. JCT. BX	12V IGNITION - CENT

RELAYS

R#	DIAG. PAGE COIL	DIAG. PAGE CONT'T	AMP	CATEGORY	VOLT. COIL	LOCATION	FUNCTION
36	13	13	200	MAGNETIC N.O.	24	ENG. JCT. BOX	EVAP. FAN MOTOR - FR
37	13	13	200	" "	"	"	" " " - RR
38	13	13	20	CUBIC N.O.	"	FR. JCT. BOX	DEFROSTER CTR
39	8	8	20	" "	"	"	DOOR AJAR
40	18	18	20	" "	"	"	RR & FR DOOR SPEED SW CTR.
41	19	19	20	" "	"	"	ANTI SKID CTR
42	19	19	20	" "	"	"	" " "
43	19	19	20	" "	"	"	" " "
44	19	7	20 10	" N.O. N.C.	"	"	" " "
45	21	21	20	" N.O.	"	"	KNEELING CTR
46	21	21	10	" N.C.	"	"	" "
47	21	21	30	" N.O.	12	ENG. JCT. BOX	ARTICULATION SW
48	6	6	20	" "	24	FR. JCT. BOX	DOOR AJAR IGNITION
49	23	23	30	" "	12	"	RADIO & AMPLI.
50	23	23	30	" "	12	"	" "
Ⓔ 51	2	2	30	" "	24	ENG. JCT. BOX	"KILL SW" CRUISE CTR.
52							
53	7	7	30	CUBIC N.O.	12	CENT. JCT. BOX	BACK-UP LT
54	9	9	20	" "	24	"	GENERAL LT (REAR SECTION)
55	9	9	20	" "	24	"	24 V FLUOR (REAR SECTION)
56	5	5	20	" "	24	CENT. JCT. BOX	SIDE MARKER, TAIL & LICENCE LT.
57	1	1	20	" "	"	ENG. JCT. BOX	VOLTAGE REGULATOR - IGN.
58	16	16	20	" "	"	CENT. JCT. BOX	TOILET FLUORESCENT
59	5	6	20	" "	"	FR. JCT. BOX	CORNERING LT RH
60	5	6	20	" "	"	"	" " LH.
61	5	5	20	" "	"	"	" " CUT-OUT
62	5	7	20	" "	"	"	MARKER LT - FR SECTION
63	5	8	20	" "	"	CENT. JCT. BOX	EXIT LT
64	22	22	30	" "	12	RR STEP LPT	CAMERA DOOR SYST. - SERVICE
65	23	23	50	SPC. CUBIC N.O.	"	ENG. JCT. BOX	LUGGAGE DOOR LOCK - FR
66	23	23	50	" " "	"	"	" " " - "
67	23	23	20	CUBIC N.O.	24	CENT. JCT. BOX	LH LUGGAGE DOOR LOCK - RR
68	23	23	20	" "	"	"	" " " " - "
69	23	23	20	" "	"	"	RH LUGGAGE DOOR LOCK - RR
70	23	23	20	" "	"	"	" " " " - "
71	22	22	30	" "	12	FR. JCT. BOX	BACK-UP MONITOR
72	1	24	10	CUBIC N.C.	24	"	RADIO AMPLIFIER CUT-IN
73	1	24	10	" "	24	"	" " " "

LEGEND

FRONT JUNCTION PANEL	BATTERY JUNCTION BLOCK
REAR JUNCTION PANEL	SINGLE CONNECTOR
BATTERY COMPARTMENT	DIODE (RECTIFIER)
CIRCUIT BREAKER	OPTION
HARNESS CONNECTOR	

ITEM	DATE	REVISION	PAR
E	88-09	VOIR C.D. 15090	B.C
D	88-05	MISE À JOUR	M/
C	88-05	MISE À JOUR	B.C
B	88-03	MISE À JOUR "FUNCTION"	B.C.
A	88-03	ETAIT /J008	Bc.

TITRE: RELAYS CODE

DESS: D.T. | DATE: 88-02

VER.: - | APPR.: -

APPL: EFF. W/J009 Ⓐ | REF: H5-60 | NO: D-060660 p. G | C

RESISTOR CODE

RESISTOR							
RS #	VOLTAGE BEFORE	VOLTAGE AFTER	WATT	CATEGORY	DIAG. PAGE	LOCATION	FUNCTION
1	12		1/4	10 K	2	B.J.M	E.C.M. DDEC
2	12		1/4	4.3 K	2	"	" "
3							
4	24		1/2	470 K	12	"	A/C TIME DELAY RELAY
5	12		10	F-101	6	B.J.A.	CORNERING LTS
6	12		10	F-101	7	B.J.AR	DOCKING LT - RH
7	12		10	F-101	7	B.J.AR.	DOCKING LT - LH
8	12		10	F-101	4	FR. SERV. CPT.	FR. FOG-LH
9	12		10	F-101	4	FR. SERV. CPT.	FR. FOG-RH

RESISTOR							
RS #	VOLTAGE BEFORE	VOLTAGE AFTER	WATT	CATEGORY	DIAG. PAGE	LOCATION	FUNCTION

PREVOST

LEGEND

- FRONT JUNCTION PANEL
- REAR JUNCTION PANEL
- BATTERY COMPARTMENT
- CIRCUIT BREAKER
- HARNESS CONNECTOR
- BATTERY JUNCTION BLOCK
- SINGLE CONNECTOR
- DIODE (RECTIFIER)
- OPTION

[illegible]

ITEM	DATE	REVISION	PAR
B	88-03	MISE A JOUR "FUNCTION"	B.C.
A	88-03	ETAIT /J008	B.C.

TITRE: RESISTOR CODE

DESS: D.T. | DATE - 88-02

VER. - | APPR. -

APPL: EFF. W/J009 △A | REF: H5-60 | NO: D-060660 p. H | C

SWITCH CODE

SWITCH							
SW#	AMP.	VOLT.	DIAG. PAGE	LOCATION	DESCRIPTION	TYPE	SYMBOL
1		24	1	B.J.P	CUT OUT SW 24V		
2		12	1	"	" " " 12V		
3		24	1	DASH	FAST IDLE SW	SWF	
4		"	1	"	WEBASTO SW	"	
5		12	2	"	STOP ENGINE OVERRIDE	"	
6		12	2	"	CRUISE CTR ON/OFF	"	
7		"	"	"	CRUISE "RESUME" SW	"	
8		"	3	STEER CPT	ATEC TEST SW		
9		24	4	DASH	FOG LT	SWF	
10		"	"	STEER WHEEL	HORN BUTTON		
11		24	5	DASH	HEAD LAMP		
12		"	"	STEER WHEEL	MULTI-FUNCTION LEVEL		
13		24	"	DASH	HAZARD SW	SWF	
14		24	7	STEER CPT	STOP LT SW		
15		"	"	B.J. MOT	ENG. CPT LT SW		
16		"	"	CPT MOT	" " " "		
17		"	8	CPT STEER	STEERING CPT LT SW		
18		"	7	LUG CPT	BAGGAGE COMPT SW		
19		"	9	DASH CONS.6A	GENERAL LTS SW AND 24V FLUOR. SW	SWF	
20		"	9	" " "	READING LT SW (DRIVER'S)	SWF	
21							
22		24	9	DASH CONS.6A	DRIVER'S LT SW	SWF	
23		"	9	HAT RACK	READ LT SW (PASS)	IKI	
24		"	10	DASH	RHEOSTAT		
25		"	"	DASH CONS.6A	PASS. & HOSTESS CHIME (DRIVER'S)	SWF	
26		"	"	HAT RACK	PASS CHIME SW		
27		"	"	" "	HOSTESS CHIME SW		
28		"	11	DASH	FRESH AIR SW	SWF	
29		"	"	"	A/C & HEAT SW	SWF	
30		"	"	"	RHEOSTAT RR,CTR,T°		
31		"	12	"	RHEOSTAT FR,CTR,T°		
32							
33		"	13	"	RHEOSTAT - DRIV. HTR FAN		
34		"	13	"	" - DRIV. TEMP CTR		
35		"	14	"	REAR VIEW MIRROR ADJUSTING SW-LH		
36		"	14	"	REAR VIEW MIRROR ADJUSTING SW-RH		
37		"	14	"	HEATED MIRROR SW	SWF	

SWITCH							
SW#	AMP.	VOLT.	DIAG. PAGE	LOCATION	DESCRIPTION	TYPE	SYMBOL
38		24	14	DASH	DRIVER'S LIFTER WINDOW	SWF	
39		"	16	TOILET	TOILET DOOR LOCK SW		
40		"	"	"	FLUSHING SW		
41		"	"	"	TOILET EMERGENCY SW		
42		"	"		DIFFERENTIAL LOCK SW		
43		"	3	CPT MOT	RETARDER SW		
44		"	17	DASH	UPPER DEFROSTER	SWF	
45		"	"	"	UPPER WINDSHIELD WIPER MOTOR CTR SW		
46		"	"	"	UPPER WINDSHIELD WASHER CTR SW	SWF	
47		"	18	"	RR & FR DOOR CTR SW	SWF	
48							
49		24	18	FR DOOR	FR DOOR CTR-DOOR PIVOT		
50		"	"	RR DOOR	RR DOOR CTR-DOOR PIVOT		
51		24	21	DASH	ETHER SW	SWF	
52		24	"	"	KNEELING	SWF	
53		"	"	ARTICULATION	ARTICULATION - TELL-TALE		
54		"	"	"	" - ALARM		
55		"	"	"	" - PARK		
56		"	"	"	" - VERT ALARM		
57		"	22	DASH	ARTICULATION BRAKE	SWF	
58		"	"	"	SEAT HEATER	SWF	
59		"	23	"	LUGGAGE DOOR LOCK SW	"	
60		"	"	LUG. CPT	LUGGAGE LOCK SW	KNIPEX	
61		"	23	DASH	SPEAKER CTR SW	CUTLER HAMMER	
62		"	"	"	RHEOSTAT P.A. VOLUME		
63			7	CPT STEERING	PARKING TTLT SW		
64		12	2	DASH	CRUISE "SET" SW	SWF	
65		12	2	"	CRUISE "KILL" SW		
66		24	22	RR STEP CPT	CAMERA DOOR SYST.	JOG	
67							
68							

LEGEND	
FRONT JUNCTION PANEL	BATTERY JUNCTION BLOCK
REAR JUNCTION PANEL	SINGLE CONNECTOR
BATTERY COMPARTMENT	DIODE (RECTIFIER)
CIRCUIT BREAKER	OPTION
HARNESS CONNECTION	

ITEM	DATE	REVISION	PAR
B	88-03	MISE A JOUR DESCRIPTION	BC
A	88-03	ETAIT /J008	BC

DESC: SWITCH CODE

APPL: EFF. W/J009 ⚠ REF: H5-60

DESS: D.T. DATE: 88-02

VER.- APPR.-

NO: D-060660 p. I C

TELL-TALE LITE CODE

TELL-TALE LITE

TTL#	WATT	VOLT	DIAG. PAGE	LOCATION	DESCRIPTION	TYPE	SYMBOL
1		24	1	DASH	PARKING BRAKE		
2		"	"	"	WEBASTO - HEATER ON		
3		12	2	"	STOP ENGINE		
4		"	"	"	CHECK ENGINE		
5		"	"	"	CRUISE ENABLE		
6		24	3	"	CHECK TRANSMISSION		
7		"	4	"	LO-AIR (SEC.)		
8		"	"	"	LO-AIR (PRIM.)		
9		"	"	"	FIRE		
10		12	6	"	TURN SIGNAL RH		
11		"	"	"	" " LH		
12		24	5	"	HI-BEAM		
13		"	7	"	BRAKE		
14		"	11	"	NOT GENERATOR		
15		"	11	"	REAR HTR		
16		"	12	"	FRONT HTR		
17		"	"	"	LOW PRESSURE		
18		"	"	"	HI PRESSURE		
19		"	16	"	LOW FUEL		
20		"	"	"	TOILET		
21		"	"	"	DIFFERENTIAL LOCK		
22		"	3	"	RETARDER		
23		"	18	"	RR DOOR		
24							
25		12	19	DASH	ANTI-SKID		
26		24	21	"	KNEELING		
27		"	23	"	LUGGAGE DOOR LOCK		
28		"	21	"	ARTICULATION TTLT		
29		"	11	"	REAR COOL		
30		"	11	"	FRONT COOL		
31		"	8	"	DOOR AJAR		

TELL-TALE LITE

TTL#	WATT	VOLT	DIAG. PAGE	LOCATION	DESCRIPTION	TYPE	SYMBOL

PREVOST — LEGEND

	FRONT JUNCTION PANEL		BATTERY JUNCTION BLOCK
	REAR JUNCTION PANEL		SINGLE CONNECTOR
	BATTERY COMPARTMENT	-DO-	DIODE (IDENTIFIED)
	CIRCUIT BREAKER	....	OPTION
	HARNESS CONNECTOR		

[illegible]

ITEM	DATE	REVISION	PAR
C	91-02	MISE A JOUR	MJ
B	88-03	MISE A JOUR	B.C.
A	88-03	ETAIT J008	B.C.

DESC: TELL-TALE LITE CODE

DESS: D.V. DATE- 88-02
VER.- BC APPR.-

APPL: EFF. W/ J009 ⚠ PRIOR L034 REF: H5-60

NO: D-060660 p. J

WIRING DIAGRAM CODE H5-60

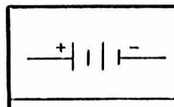

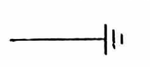

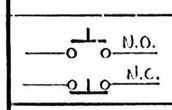

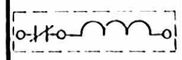

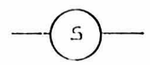

BATTERY	
GROUND	
METER GAUGE	
N.O. / N.C.	MOMENTARY CONTACT PUSH BUTTON SWITCH
BUZZER	
S	SOLENOID
BELL	
VALVE	
HEATER	
R / B	MAGNETIC SWITCH RELAY
85 R 86 / 30 87	MINI-RELAY N.O.
85 R 86 / 30 87 87A	MINI-RELAY N.O (87) AND N.C. (87A)
85 R 86 / 30 87A	MINI-RELAY N.C
CONNECTOR SOCKET PIN	WIRES CROSSING
	WIRES WELDING

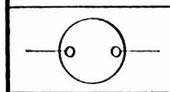

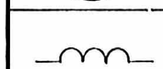

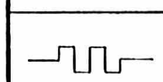

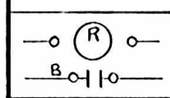

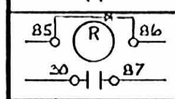

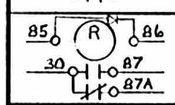

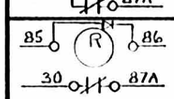

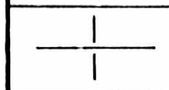

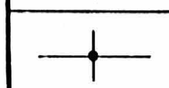

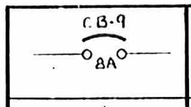

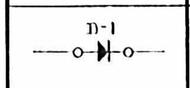

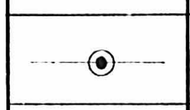

CB-9 8A	CIRCUIT BREAKER
FUSE#1, 8A	FUSE
D-1	DIODE
	JUNCTION TERMINAL BLOCK
	THERMOSTAT
P	PUMP
LT	LIGHT
F	FLASHER

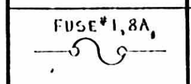

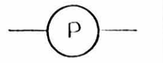

LEGEND

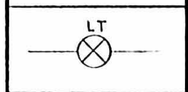

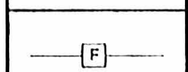

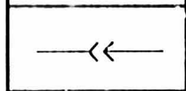

FRONT JUNCTION PANEL	BATTERY JUNCTION BLOCK
REAR JUNCTION PANEL	SINGLE CONNECTOR
BATTERY COMPARTMENT	DIODE (RECTIFIER)
CIRCUIT BREAKER	OPTION
HARNESS CONNECTOR	

ITEM	DATE	REVISION	PAR
B	88-04	C.D. #13886	BC
A	88-03	ETAIT /J008	

DESC: WIRING DIAGRAM

APPL: EFF. W/J009 △A

REF: H5-60

DESS: D.T.

DATE - 88-02

VER. -

APPR. -

NO: D-060660-p.K

C

WIRING DIAGRAM INDEX H5-60

A/C AND HEAT SYSTEM	PAGE	11,12,13
AIR DRYER	P.	22
ALARM AND SIGNAL	P.	4
ANTI-SKID	P.	19,20
ARTICULATION BRAKE	P.	22
ARTICULATION SWITCH	P.	21
BACK UP MONITOR	P.	22
CHARGING SYSTEM	P.	1
CIGAR LIGHTER	P.	14
CRUISE CONTROL	P.	2
DIFFERENTIAL LOCK	P.	16
DIGITAL THERMOMETER	P.	23
DRIVER'S SEAT HEATER	P.	22
DRIVER'S WINDOW	P.	14
ENGINE CONTROL	P.	1
ENTRANCE DOOR CONTROL (FRONT & REAR)	P.	18
EXTERIOR LIGHTING	P.	4,5,6,7
HEATED MIRROR	P.	14
HOSTESS CHIME	P.	10
INTERIOR LIGHTING	PAGE	7,8,9,10
KNEELING	P.	21
LOWER WINDSHIELD (WIPER & WASHER)	P.	17
LUGGAGE DOOR LOCK	P.	23
MOTOR HEATER	P.	23
PASSENGER CHIME	P.	10
QUICK START	P.	21
REAR VIEW MIRROR	P.	14
RETARDER	P.	3
SOUND SYSTEM	P.	24
TACHOGRAPHE	P.	16
TOILET	P.	16
UPPER WINDSHIELD DEFROST	P.	17
UPPER WINDSHIELD (WIPER & WASHER)	P.	17
WATER TANK HEATER	P.	23
LOW FUEL	P.	16
FRONT DESTINATION SIGN.	P.	15
STORE	P.	15
RACOR FUEL FILTER	P.	21

LEGEND

ITEM	DATE	REVISION	PAR
A	88-03	ETAIT 1J008	BC

DESC : WIRING DIAGRAM H5-60

DESS: D.V. DATE- 88-02

VER.- APPR.-

APPL: EFF. W/ J009 ⚠ REF: H5-60 NO: D-060660 p. L C

WIRING DIAGRAM INDEX H5-60

A/C AND HEAT SYSTEM	PAGE	11,12,13
AIR DRYER	P.	22
ALARM AND SIGNAL	P.	4
ANTI-SKID	P.	19,20
ARTICULATION BRAKE	P.	22
ARTICULATION SWITCH	P.	21
BACK UP MONITOR	P.	22
CHARGING SYSTEM	P.	1
CIGAR LIGHTER	P.	14
CRUISE CONTROL	P.	2
DIFFERENTIAL LOCK	P.	16
DIGITAL THERMOMETER	P.	23
DRIVER'S SEAT HEATER	P.	22
DRIVER'S WINDOW	P.	14
ENGINE CONTROL	P.	1
ENTRANCE DOOR CONTROL (FRONT & REAR)	P.	18
EXTERIOR LIGHTING	P.	4,5,6,7
HEATED MIRROR	P.	14
HOSTESS CHIME	P.	10
INTERIOR LIGHTING	PAGE	7,8,9,10
KNEELING	P.	21
LOWER WINDSHIELD (WIPER & WASHER)	P.	17
LUGGAGE DOOR LOCK	P.	23
MOTOR HEATER	P.	23
PASSENGER CHIME	P.	10
QUICK START	P.	21
REAR VIEW MIRROR	P.	14
RETARDER	P.	3
SOUND SYSTEM	P.	24
TACHOGRAPH	P.	16
TOILET	P.	16
UPPER WINDSHIELD DEFROST	P.	17
UPPER WINDSHIELD (WIPER & WASHER)	P.	17
WATER TANK HEATER	P.	23
LOW FUEL	P.	16
FRONT DESTINATION SIGN.	P.	15
SUN VISOR	P.	15
RACOR FUEL FILTER	P.	21

PREVOST — LEGEND

- FRONT JUNCTION PANEL
- REAR JUNCTION PANEL
- BATTERY COMPARTMENT
- CIRCUIT BREAKER
- HARNESS CONNECTOR
- BATTERY JUNCTION BLOCK
- SINGLE CONNECTOR
- DIODE (RECTIFIER)
- OPTION

THIS DOCUMENT IS THE EXCLUSIVE PROPERTY OF PREVOST CAR INC. STE-CLAIRE, QUE., AND MAY NOT BE USED, OR REPRODUCED, NOR ITS CONTENT OR PART THERE OF DISCLOSED TO OTHERS BY ANY PERSON OR COMPANY SAVE WITH THE EXPRESS CONSENT IN WRITING FROM PREVOST CAR INC.

ITEM	DATE	REVISION	PAR
B	91-10	SUN VISOR ETAIT STORE	MJ
A	88-03	ETAIT 1J008	BC

DESC: WIRING DIAGRAM

DESS: D.V. DATE- 88-02

VER.- APPR.-

APPL: EFF. W/J009 ⚠ PRIOR L034 REF: H5-60

NO: D-060660 p.L C

WIRING DIAGRAM INDEX H5-60

A/C AND HEAT SYSTEM	PAGE	11,12,13
AIR DRYER	P.	22
ALARM AND SIGNAL	P.	4
ANTI-SKID	P.	19,20
ARTICULATION BRAKE	P.	22
ARTICULATION SWITCH	P.	21
BACK UP MONITOR	P.	22
CHARGING SYSTEM	P.	1
CIGAR LIGHTER	P.	14
CRUISE CONTROL	P.	2
DIFFERENTIAL LOCK	P.	16
DIGITAL THERMOMETER	P.	23
DRIVER'S SEAT HEATER	P.	22
DRIVER'S WINDOW	P.	14
ENGINE CONTROL	P.	1
ENTRANCE DOOR CONTROL (FRONT & REAR)	P.	18
EXTERIOR LIGHTING	P.	4,5,6,7
HEATED MIRROR	P.	14
HOSTESS CHIME	P.	10
INTERIOR LIGHTING	PAGE	7,8,9,10
KNEELING	P.	21
LOWER WINDSHIELD (WIPER & WASHER)	P.	17
LUGGAGE DOOR LOCK	P.	23
MOTOR HEATER	P.	23
PASSENGER CHIME	P.	10
QUICK START	P.	21
REAR VIEW MIRROR	P.	14
RETARDER	P.	3
SOUND SYSTEM	P.	24
TACHOGRAPH	P.	16
TOILET	P.	16
UPPER WINDSHIELD DEFROST	P.	17
UPPER WINDSHIELD (WIPER & WASHER)	P.	17
WATER TANK HEATER	P.	23
LOW FUEL	P.	16
FRONT DESTINATION SIGN.	P.	15
SUN VISOR	P.	15
RACOR FUEL FILTER	P.	21

PREVOST LEGEND

FRONT JUNCTION PANEL
REAR JUNCTION PANEL
BATTERY COMPARTMENT
CIRCUIT BREAKER
HARNESS CONNECTOR
BATTERY JUNCTION BLOCK
SINGLE CONNECTOR
DIODE (RECTIFIER)
OPTION

ITEM	DATE	REVISION	PAR
C	91-10	SUN VISOR ETAIT STORE	MJ
B	88-02	LANCE	DT
A	87-04	CORR. PRELIMINAIRE	P.C.

TITRE: WIRING DIAGRAM H5-60

DESS: P.C. | DATE- 87-04
VER.- | APPR.-

APPL: EFF. W/J001 PRIOR TO J009 | REF: H5-60 | NO: D-060566 p.L | C

D-060566 C

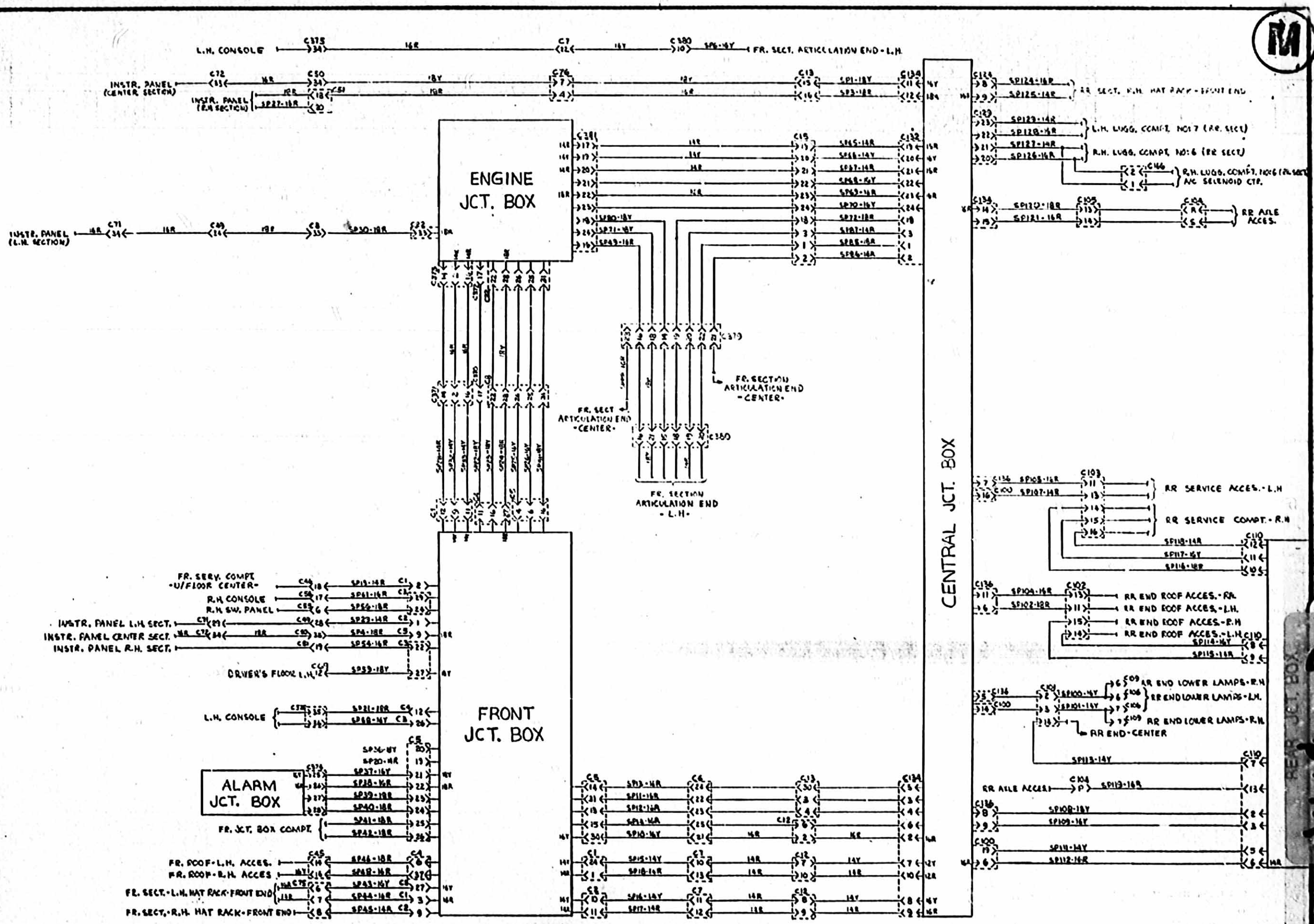

ITEM	DATE	REVISION	BY
A	91-02	MISE A JOUR	MJ

DESCRIPTION: SPARE WIRES

DR. M.J. DATE - 88/05/30

CK. LC APPR. -

APPL: EFF. W/ J009 PRIOR TO: L033 REF:

NO: D-060660 p.M C

CHARGING SYSTEM

ENGINE CONTROLS

BATTERIES

BUS BAR

BORNE 12V ING HOT.

STARTER SW.

MASTER SW

FAST IDLE SW "3

WEBASTO SW "4

PARK BRAKE TTLT "1

HEATER ON TTL T "2

WEBASTO CONTROL MODULE

GENERATOR 24V-2909

VOLTAGE REGULATOR

MOTOR STATER

STARTER SOL.

24V CUT OUT SW #1

12V CUT OUT SW #2

BOOSTER BLOCK

231A

F	88-08	R-2A, POS. 86 ETAIT FIL "85	ML
E	88-06	MISE A JOUR	ML
D	88-05	MISE A JOUR	B.C.
C	88/04	C.D.# 13920	ML
B	88/03	D-4 AJOUTÉ	ML
A	88/03	R72 & R73 AJOUTÉS	ML
ITEM	DATE	REVISION	PAR

DESC: WIRING DIAGRAM

DESS: D.V.

DATE: 88-02

VER.: C

APPL: EFF. W/J009

REF: H5-60

NO: D-060660 1/24 C

DDEC II WIRING DIAGRAM

ENGINE JCT BOX
BATTERY GND
JCT BLOCK

0-00-6 · 0-00-14 · 0-00A-12 · 0-150-12 · 0-150A-12

CB-11 20A 12-240-12 (12-12A-10)
CB-12 20A 12-241-12 (12-12A-10)
CB-116 5A 12-12VI-16 (12-12VI-14)

CRUISE CTR DECEL. SW #65 (A, B, 7, 8)
CRUISE CONT. ON/OFF SW #6
STOP ENGINE OVERRIDE SW #5
CRUISE CONT. RESUME SW #7
CRUISE CONT. SET SW #64

COOLANT LEVEL PROBE
COOLANT LEVEL SYSTEM MODULE
SPEED SENSOR "NOT USED"
NOT USED
TWO SPEED GOVERNOR
THROTTLE POSITION SENSOR

CHECK ENG. T.T. LT #4
STOP ENG. T.T. LT #3
CRUISE T.T. LT #5

R7 · R6 · R51 · RS1 = 10 KΩ · RS2 = 4.3 KΩ

C382 (M L K J H G; 451 901 210 216 505 900 207 439 902 A B C D E F)

C22 17 · C385 2 · C385 6

12-12VD-18 · 12-538-18 · 12-505-18 · 12-435-18 · 12-556-18 · 12-543A-18 · 12-525-18

E.C.M.

C26 (g, k, h, n) · C33 (C, D, E, F, A, B) · 16 GA · 12Y6 · 10" MAX.

C25 (Y) · C34 (H3, E3, E2, H1)

C90 · C378 · C370 · C372 · C72 · C50 · C376 · C374 · C323 · C375 · C371 · C373 · C380 · C379 · C381 · C386 · C385 · C252 · C53 · C377 · C68 · C61

ECM	Wire	Color	Pin
L	510		D1
d	531		J2
U	543		G2
P	542		F1
p	541		J1
R	544		F2
V	545		G3
A	508		A1
X	524		H2
S	903		F3
f	972		K3
e	908		J3
N	451		E1
H	901		C1
J	900		C2
g	902		K2
f	505		K1
K	952		C3
M	417		D2
c	916		A3
D	419		B1
F	509		B2
B	555		A2
G	439		B3
T	528		G1

12-V CENT · 24-V CENT · 12-V ENG · 24-V ENG · 12-V FRONT · 24-V FRONT · 12-V H.W. FR · 24-V H.W. FR · 0-18 · 24-221-18 · 24-114A-18 · 24-91A-18 · 24-91-16 · 24-89-16 · CR2 BUS BAR IGN ENG · 24-235-16 · 24-576-14 · 12-528-18 · 12 VI · 24-235-16 · 12-908-18 · 12-210-18 · 12-216-18 · 12-207-18 · 12-439-18 · 12-439-18 · 12-556-18 · 12-12VD-12

LEGEND

FRONT JUNCTION PANEL	BATTERY JUNCTION BLOCK
REAR JUNCTION PANEL	SINGLE CONNECTOR
BATTERY COMPARTMENT	DIODE (RECTIFIER)
CIRCUIT BREAKER	OPTION
HARNESS CONNECTOR	

THIS DOCUMENT IS THE EXCLUSIVE PROPERTY OF PREVOST CAR INC. IT CONTAINS INFORMATION WHICH MAY NOT BE USED, COPIED OR REPRODUCED, NOR TO CONTENTS OR PART THEREOF DISCLOSED TO OTHERS BY ANY PERSON OR COMPANY SAVE WITH THE EXPRESS CONSENT IN WRITING FROM PREVOST CAR INC.

ITEM	DATE	REVISION	PAR
C	88-05	MISE À JOUR	M.J.
B	88-05	MISE A JOUR	B.C.
A	88-03	ETAIT J1008	B.C.

DESS: D.V. · DATE: 88-02
VER.: C · APPR.:
APPL: VEH. EFF. J009 (A) · REF: H5-60
NO: D-060660 2/24 · C

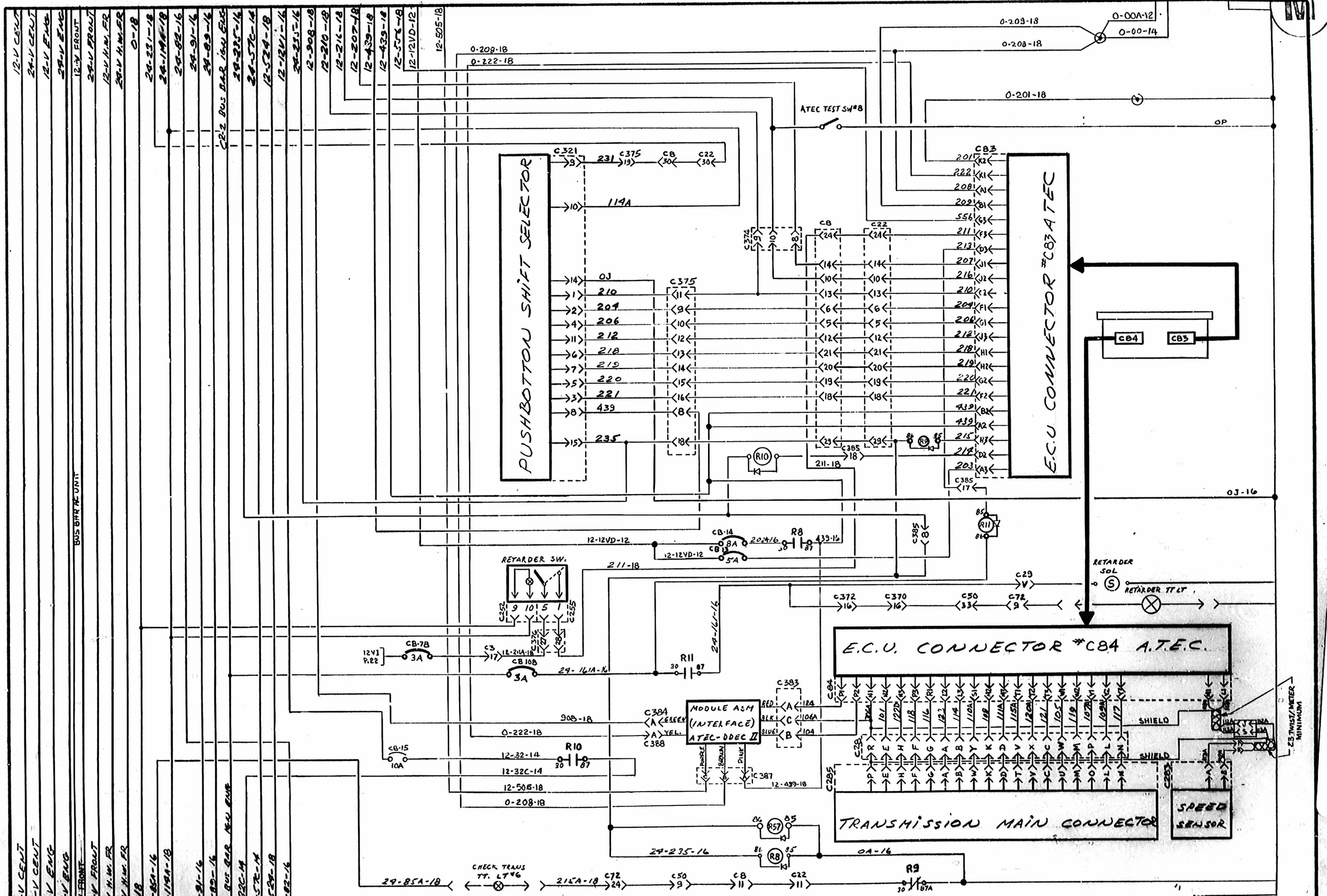

12-V CEUT	24-V CEUT	12-V ENG	24-V ENG	12-V FRONT	24-V FRONT	12-V H.W. FR	24-V H.W. FR	0-18	24-231-18	24-1148-18	24-82-16	24-91-16	24-89-16	24-235-16	24-527C-14	12-524-18	12-12VD-16	24-235-16	12-908-18	12-210-18	12-216-18	12-207-18	12-439-18	12-439-18	12-526-18	12-12VD-12	12-505-18

BUS BAR RC UNIT

C2-2 BUS BAR (ON ENG)

12-V CEUT	24-V CEUT	12-V ENG	24-V ENG	12-V FRONT	24-V FRONT	12-V H.W. FR	24-V H.W. FR	0-18	24-85A-18	24-1148-18	24-91-16	24-89-16	24-89-16	24-32C-14	24-527C-14	12-524-18	24-82-16

LEGEND

FRONT JUNCTION PANEL	BATTERY JUNCTION BLOCK
REAR JUNCTION PANEL	SINGLE CONNECTOR
BATTERY COMPARTMENT	DIODE (RECTIFIER)
CIRCUIT BREAKER	OPTION
HARNESS CONNECTOR	

CE DOCUMENT EST LA PROPRIETE EXCLUSIVE DE PEUGEOT CAR INC. IL NE PEUT ETRE COPIE, REPRODUIT OU COMMUNIQUE EN TOUT OU EN PARTIE, NI UTILISE POUR DE QUELQUE FAÇON QUE CE SOIT, SANS LE CONSENTEMENT ECRIT DE PEUGEOT CAR INC.

THIS DOCUMENT IS THE EXCLUSIVE PROPERTY OF PEUGEOT CAR INC. IT MAY NOT BE COPIED, REPRODUCED OR COMMUNICATED IN WHOLE OR IN PART, OR BE USED IN ANY MANNER WHATSOEVER, WITHOUT THE EXPRESS CONSENT IN WRITING FROM PEUGEOT CAR INC.

ITEM	DATE	REVISION	PAR
E	88-10	MISE A JOUR	M.L
D	88-06	MISE A JOUR	M.L
C	88-05	MISE A JOUR	B.C.
B	88-03	C.D.# 13753	B.C.
A	88-03	ETAIT 1J008	B.C

DESC : ATEC WIRING DIAGRAM

APPL: VEH. EFF. J009 (A)

REF: H5-60

DESS: D.T. | DATE- 88-02

VER.- LC | APPR.-

NO: D-060660 3/24 | C

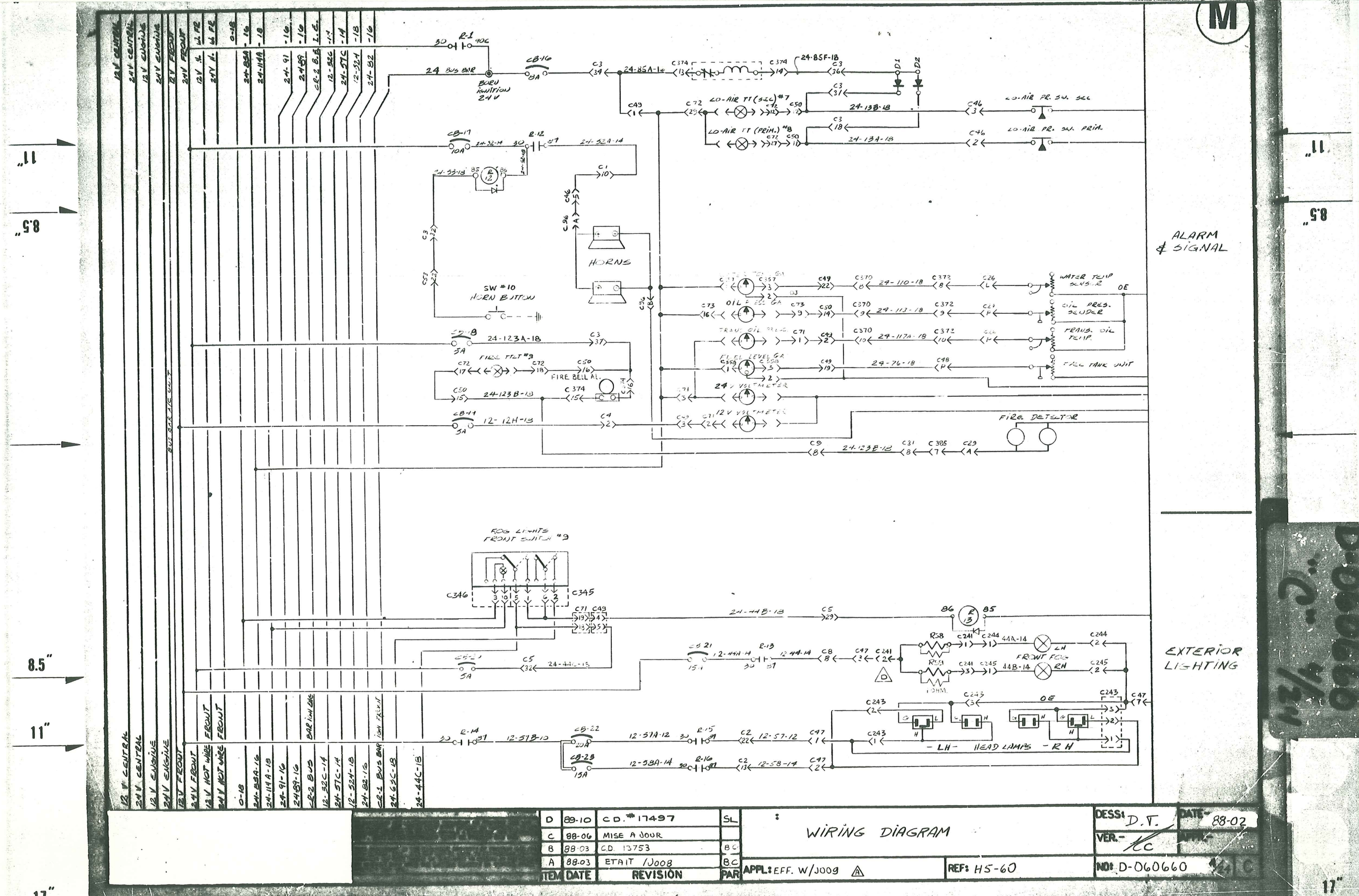

ITEM	DATE	REVISION	PAR
D	89-10	C.D. # 17497	SL
C	88-06	MISE A JOUR	
B	88-03	C.D. 13753	B.C
A	88-03	ETAIT /J008	B.C

WIRING DIAGRAM

APPL: EFF. W/J009 (A)

REF: H5-60

DESS: D.T.

DATE: 88-02

VER.: CC

NO: D-060660

4/24 C

M

12 V CENTRAL
24 V CENTRAL
12 V ENGINE
24 V ENGINE
12 V FRONT
24 V FRONT
12 V H. W. FR.
24 V H. W. FR.
0-18
24-85A-16
24-114A-18
24-91-16
24-89-16
24-89-16
12-32C-14
24-51C-14
12-524-18
24-82-16
CB-1 B.B.I.FR.
24-63C-18
24-44C-18

HEAD LAMP SW. #11

C346 C343

MULTIFONCTION LEVER SW.

HAZARD SW. #13

C346 C344

24-44C-18

C71 C49 C3

C71 22 C49 6 C2 19 — 24-63D-18 — R-21 30 87A — C3 23 C76 5 C13 1 C133 1 — R 22

24-61A-18 — C3 16 — R 14

C376 13 — 24-55-18 — C2 12 — D 21 — HI-BEAM TT LT #12 — C50 18

C7 23 C13 2 C133 2 — R 56

R 63

C376 10 C376 22

CB-24 5A — C3 11 — C376 11

C258 5 56A — 24-53B-13 — C2 14 — R 16

C258 7 56 — 24-63A-13 — C2 17 — R 21

C258 8 30 — 24-25A-18 — C2 7 — R 19

LH — 24-21A-18 — C2 5 — R 20

C258 2 87A — 53 BLUE — C259 3

C258 1 15 — 53H VIO BLK — C259 4

C258 4 J — 31B (S) — 53X GREY — C259 2

C259 5 — BRN

24-15-14 — CB25 10A — C1 16 — C376 31

24-15-14 — 16GA — 35

24-53J-16 — 23

24-31B-16 — 19

24-53C-16 — 20 — 24-53C-16

24-53B-14 — 16GA 36 — 24-53B-14

24-53E-14 — 16GA 33 KGA — 24-53E-14

16GA 37 16GA

KGA 32 16GA

D 22 — D 23

86 R 57 85 — 24 23D-18 — R-61 87A

86 R 60 85

86 R 61 85

EXTERIOR LIGHTING

12 V CENTRAL
24 V CENTRAL
12 V ENGINE
24 V ENGINE
12 V FRONT
24 V FRONT
12 V HOT WIRE FRONT
24 V HOT WIRE FRONT
0-18
24-85A-16
24-114A-18
24-91-16
24-89-16
CB-2 BUS BAR IGN. #2 FRONT
12-32C-14
24-27C-14
12-524-18
24-82-16
CB-2 BUS BAR IGN. FRONT
24-15-14
24-53J-16
24-31B-16
24-53C-16
24-53B-14
24-53E-14

CB-28 15A — 12-63B-14 — R-22 30 87 — 12-63A-14

12-46B-14 — R-50 87

CB-32 15A — 12-82A-14 — R-23 30 87 — 12-82B-14 — C100 12 — C101 13

STOP LT RH — C109 1 — C109 5

STOP LT LH — C106 1 — C106 5

CYCLOP LT — C107 1 — C107 2

CB-29 5A — 12-63B-16 — C100 10 — C102 5

CB-30 5A — 12-46A-16 — C100 8 — C101 12

C103 91 — RR. RH SIDE MARKER — C183 1 — C183 2

RR. LH. SIDE MARK. — C183 1 — C183 2

CB-31 5A — 12-46-18 — C100 7 — C101 11

REAR CLEARANCE LTS.

REAR CLEARANCE LT. — RcHG7 2 — C167 1 — R.H.

CENTER IDENT LT. — C167 2 — C167 1 — OB

L.H. — LcHG7 2 — C167 1

RR. RH. TAIL LT. — C109 4 — C109 1 — O

FR. RH. TAIL LT. — C109 4 — C109 1

RR. LH. TAIL LT. — C109 4 — C109 1 — O

RR LICENCE PLATE LT — C108 1 — C108 2 — O

O

LEGEND

FRONT JUNCTION PANEL
REAR JUNCTION PANEL
BATTERY CONNECTION
FLOAT BREAKER
HARNESS CONNECTOR

EASTERN JUNCTION BLOCK
DIODE CONNECTION
DIODE (ELECTRICAL)
OPTION

ITEM	DATE	REVISION	PAR
C	88-06	MISE A JOUR	M.L
B	88-03	C.D. #13753	B.C
A	88-03	ETAIT /J008	B.C

DESC: WIRING DIAGRAM

APPL: EFF. W/J009 ⚠

REF: H5-60

DESS: D.T. DATE: 88-02

VER.- APPR.-

NO: D-060660 5/24 C

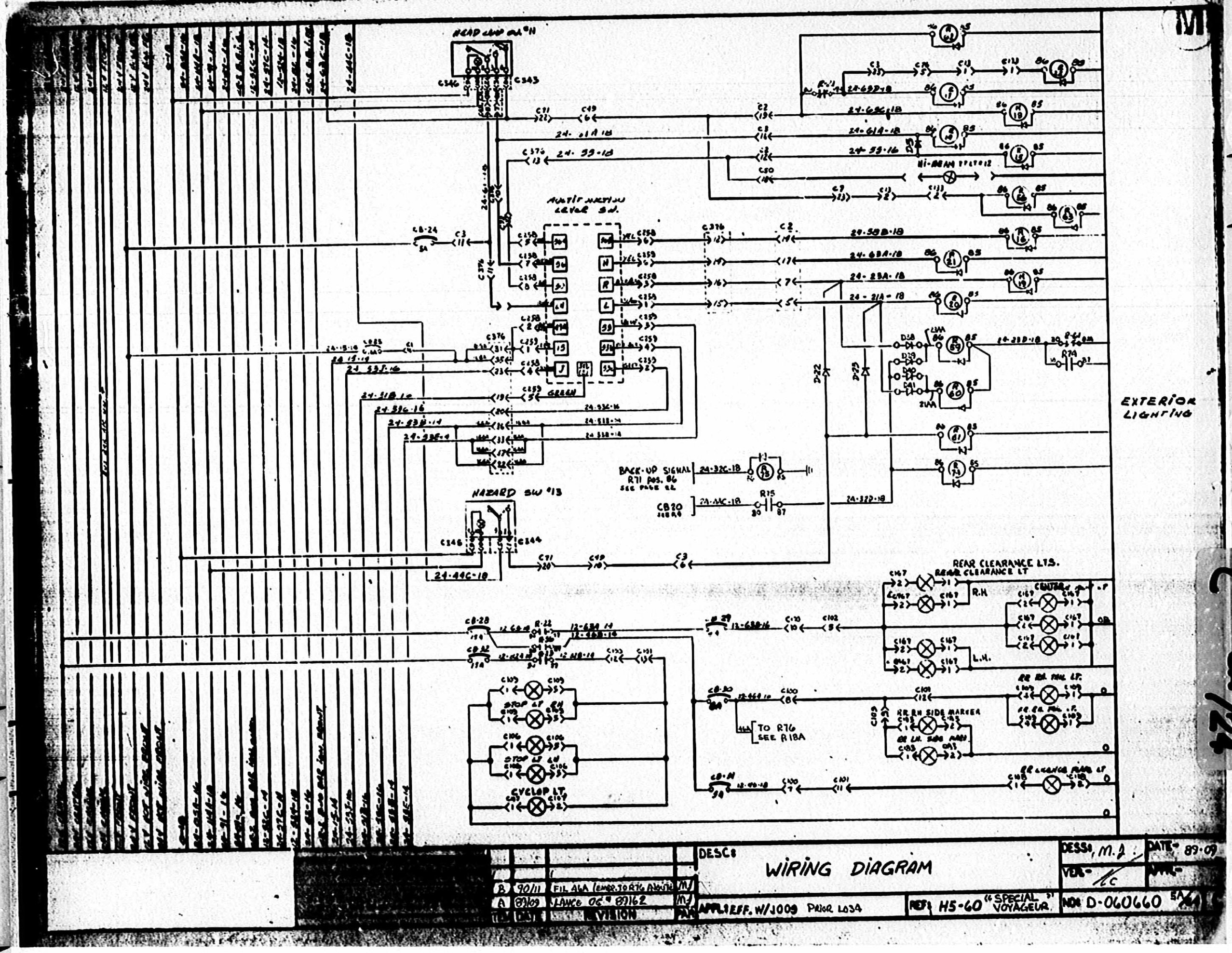
HEAD LAMP SW. #11
AUXILIARY LEVER SW.
HAZARD SW #13
BACK-UP SIGNAL
R71 POS. 86
CB20
HI-BEAM
REAR CLEARANCE LTS.
REAR CLEARANCE LT
R.H.
L.H.
CENTER
RR RH SIDE MARKER
TO R76
SEE R18A
CYCLOP LT.
EXTERIOR LIGHTING
DESC: WIRING DIAGRAM
DESS: M.J.
DATE: 89-09
VER:
APPL: EFF. W/J009 PRIOR L034
REF: H5-60 "SPECIAL" VOYAGEUR
NO: D-060660
B 90/11 FIL 46A (EMER. TO R76 ADDED) MJ
A 89/09 LANCE OC # 89162 MJ
REVISION

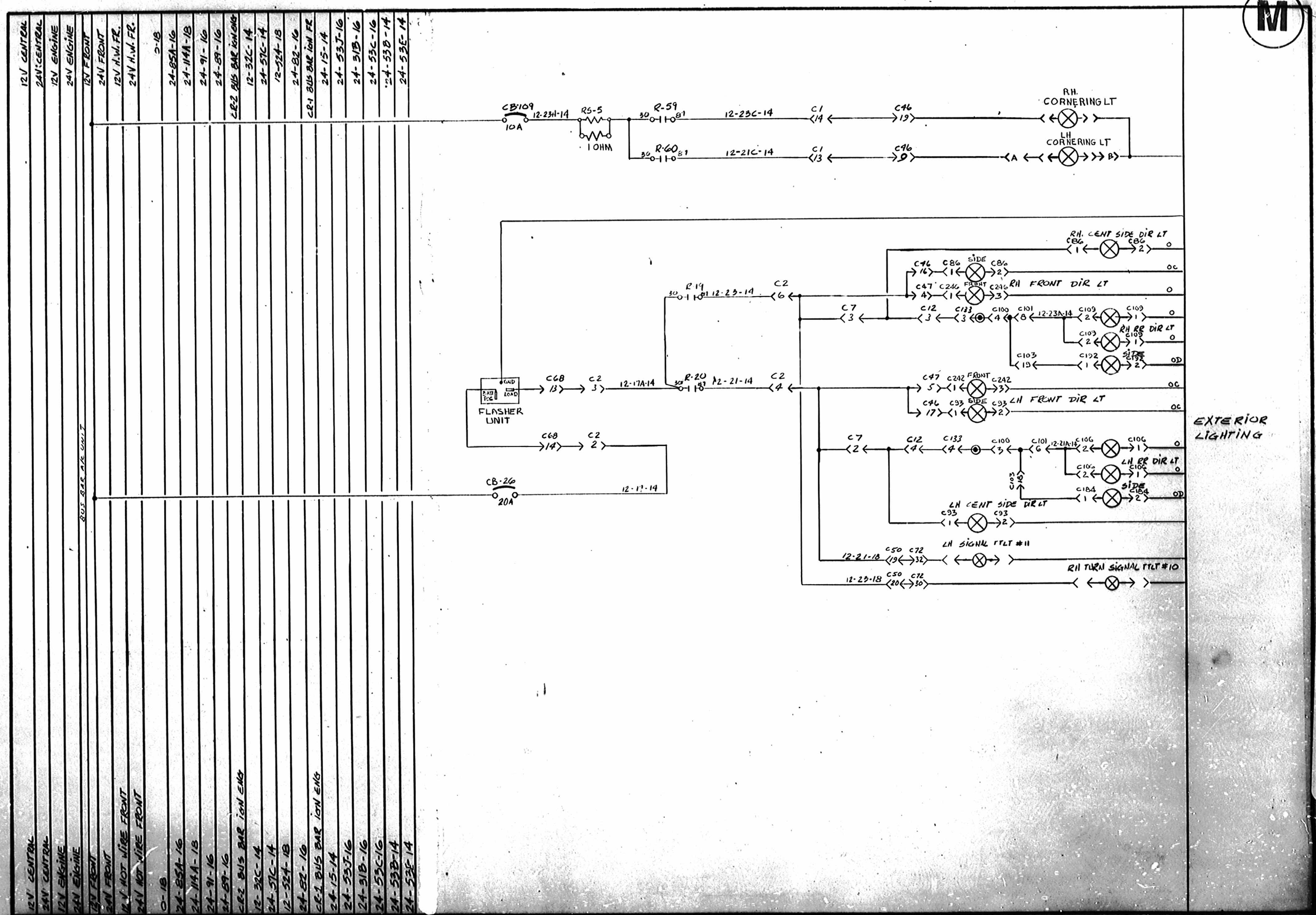

LEGEND

FRONT JUNCTION PANEL		BATTERY JUNCTION CLOCK	
REAR JUNCTION PANEL		SINGLE CONNECTOR	
BATTERY COMPARTMENT		DIODE (RECTIFIER)	
CIRCUIT BREAKER		OPTION	
HARNESS CONNECTOR			

ITEM	DATE	REVISION	PAR
C	88-07	OC# 88112 CD# 14726 ETAIT J009	M.L.
B	88-03	C.D. # 13753	B.C.
A	03-88	ETAIT / J008	B.C.

DESC: WIRING DIAGRAM

APPL: EFF. W/K020 A C

REF: H5-60

DESS: D.V.

DATE: 88-02

VER.: C

APPR.:

NO: D-060660 6/24 C

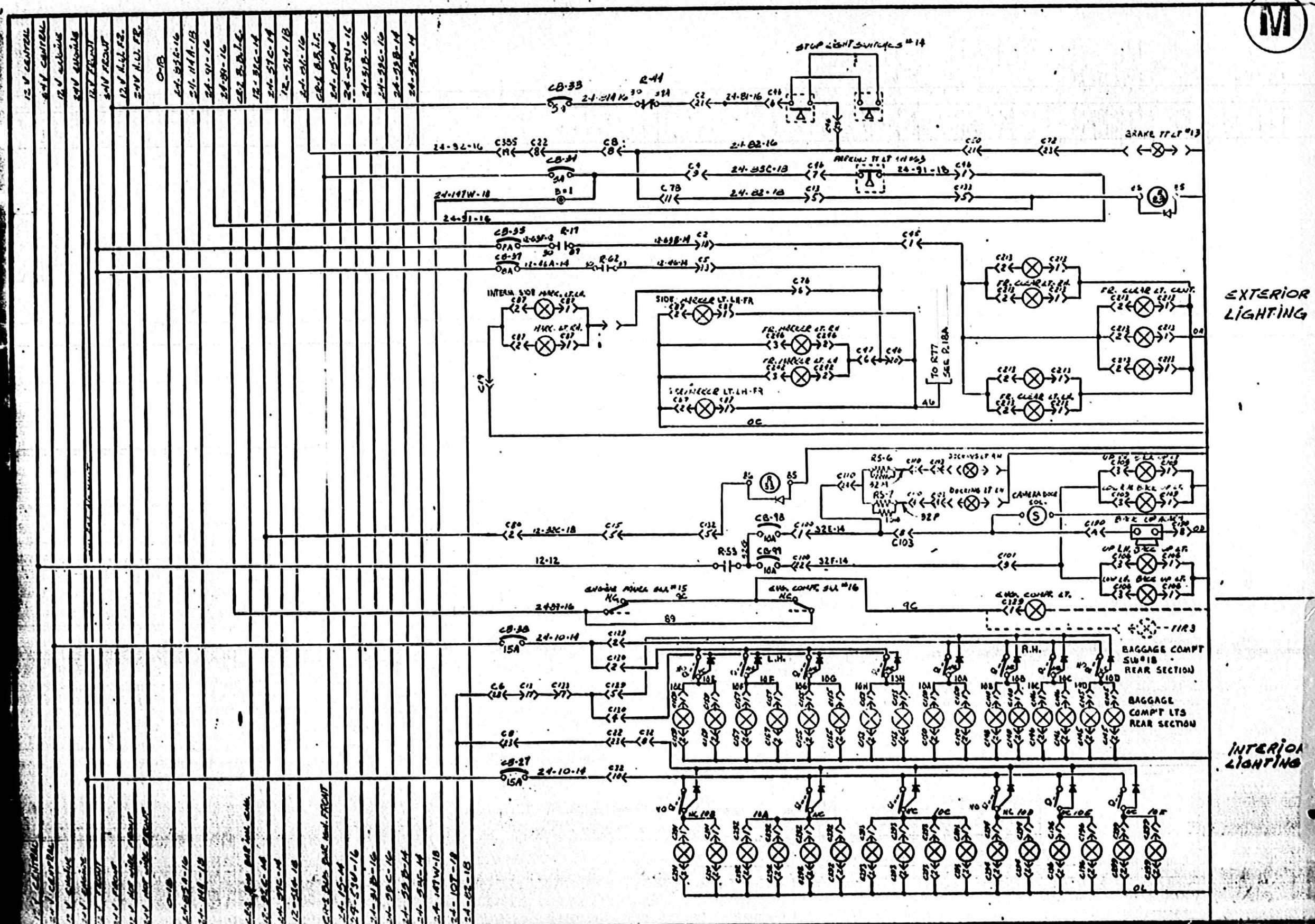

ITEM	DATE	REVISION	PAR
D	90/11	FIL 46 (TO R77 AJOUTE)	MJ
C	85-05	CB38 & CB27 ETAIENT 10A	MJ
B	88-03	CD# 13753	BC
A	88-03	ETAIT /J008	B.C

DESC: WIRING DIAGRAM

APPL: EFF. W/J009 △ PRIOR L034

REF: H5-60

DESS: D.T.

DATE: 88-02

VER: 1/C

APPR:

NO: D-060660 7/24

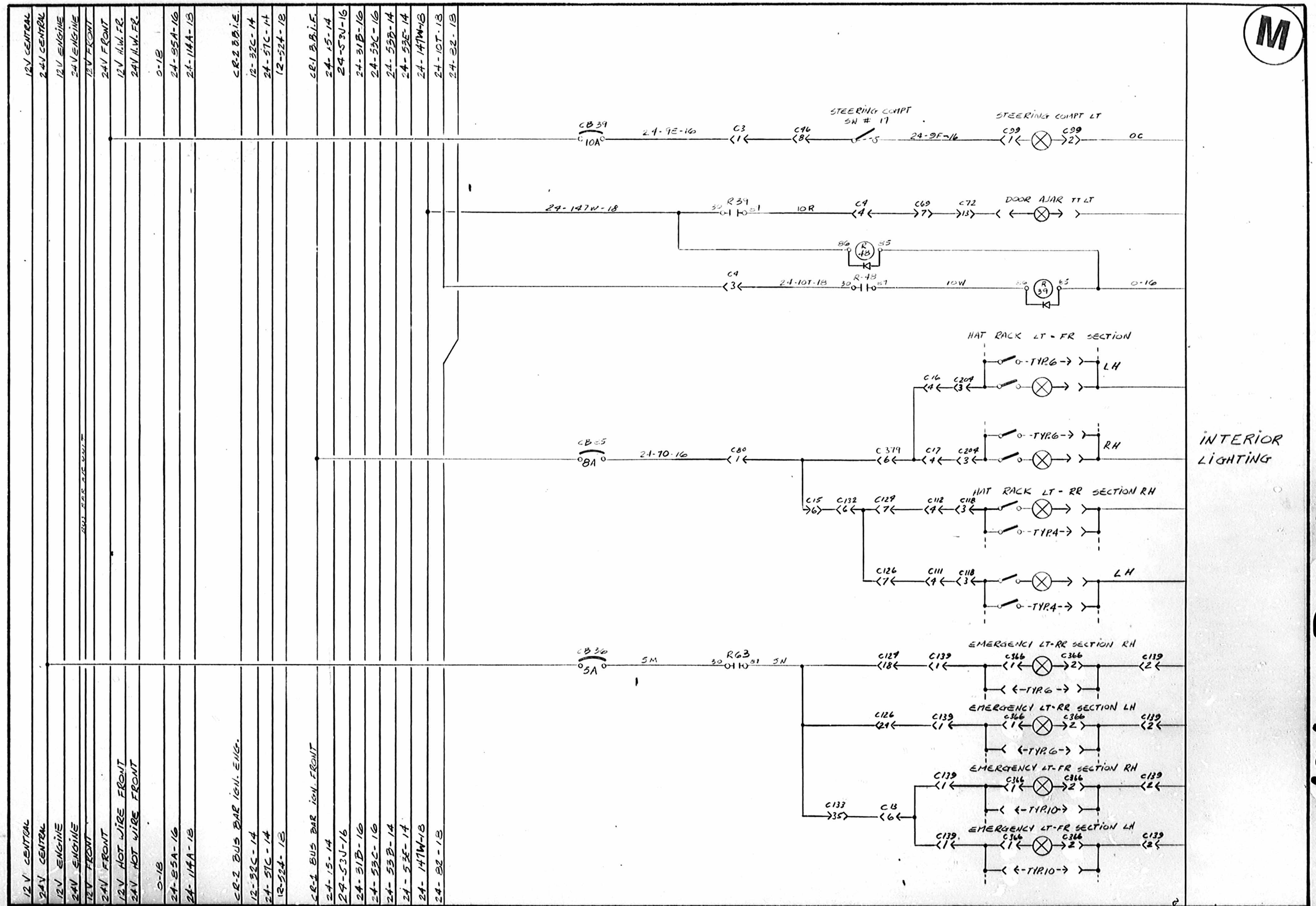

PREVOST LEGEND

FRONT JUNCTION PANEL	BATTERY JUNCTION BLOCK
REAR JUNCTION PANEL	SINGLE CONNECTOR
BATTERY COMPARTMENT	DIODE (RECTIFIER)
CIRCUIT BREAKER	OPTION
HARNESS CONNECTOR	

CE DOCUMENT EST LA PROPRIETE EXCLUSIVE DE PREVOST CAR INC. ... CONTENU COMPLET OU PARTIEL DEVOILE A D'AUTRES ... SANS LE CONSENTEMENT ECRIT DE PREVOST CAR INC.

THIS DOCUMENT IS THE EXCLUSIVE PROPERTY OF PREVOST CAR INC. ... CONTENT OR PART THERE OF DISCLOSED TO OTHERS BY ANY PERSON OR COMPANY SAVE WITH THE EXPRESS CONSENT IN WRITING FROM PREVOST CAR INC.

ITEM	DATE	REVISION	PAR
B	88-05	CB85 ETAM 5A	MJ
A	88-03	ETAIT /J008	BC

DESC: WIRING DIAGRAM

APPL: EFF. W/J009 △A

REF: H5-60

DESS: D.V.

DATE- 88-02

VER.-

APPR.-

NO: D-060660 8/24 C

M

INTERIOR LIGHTING

12 V. CENTRAL
24 V. CENTRAL
12 V. ENGINE
24 V. ENGINE
12 V. FRONT
24 V. FRONT
12 V. H.W. FR.
24 V. H.W. FR.
BUS BAR A/C UNIT
0-18
24-85A-16
24-114A-18
CR-2 B.B.I.E.
12-32C-14
24-57C-14
12-52H-18
CR-2 BBI.FR.
24-15-14
24-53U-16
24-31B-16
24-53C-16
24-53B-16
24-53E-14
24-174W-18
24-82-18

110 V RECEPTACLE PLUG

110-L1-16
L0-14
110-L2-16

BALLAST & FLUOR. 110-24 FR. RH.
BALLAST & FLUOR. 110-24 RR. RH.
BALLAST & FLUOR. 110-24 FR. LH.
BALLAST & FLUOR. 110-24 RR. LH.
TYP. 6
TYP. 3

24-38-18
24-38-14
0-14
L2A-14
L1-14
110-L2-14
110-L1B-14
110-L1C-14
110-L1A-16
CB-40 5A
CB-41 5A
CB-42 15A
CB-100 8A
CB-105 5A
R24
R54
38B
38C
38D
C68
C7
C12
C133
C379
C381
L1A-18
L2-18
0-18
24-38-18
C208
C200
C201
C203

GENERAL LTS AND 24 V. FLUOR. SW. #19
C375 21 24-38A-18
C22
C80
C15
C132
24-74D-18
24-38A-18
C9
C31
C8
C375 22 24-100A-18
CB-43 8A
24-39-16
C375 23
READING LTS SW. #20
24-74D-18
C375 24
R-25
CB-44 15A
24-74A-14
C381 7
C379 1
CB-45 15A
24-75A-14
C381 8
C379 2
R-26
CB-46 8A
24-74B-14
C124 10
CB-47 8A
24-75B-14
C126 10
R55
R27
R-55
R-27
CB-48 8A
24-100B-14
C381 9
C379 3
24-100-14
DRIVERS LT SW. #22
24-39A-16
C375 25
DRIVER'S LT. RH.
DRIVER'S LT. LH.
C45 2
C16
C17
C111
C112
C113
C114
C115
C116
C117
C118
C119
C120
C121
C122
C123
C124
C125
C126
C127
C128
C129
C130
C131
C132
C133
C209
READING LTS. FR. RH.
READING LTS. RR. RH.
READING LTS. FR. LH.
READING LTS. RR. LH.
GEN. LTS. FR. RH.
GEN. LTS. RR. RH.
GEN. LTS. FR. LH.
GEN. LTS. RR. LH.
100C-16
100C-18
TYP.
RR. EXIT LT.

LEGEND

CIRCUIT JUNCTION PANEL		BATTERY JUNCTION BLOCK	
REAR JUNCTION PANEL		CABLE CONNECTOR (MOTOR MAGNETIZER)	
BATTERY COMPARTMENT	-00-	OPTION	
CIRCUIT BREAKER	----		
HARNESS CONNECTOR			

ITEM	DATE	REVISION	PAR
A	88-03	ÉTAIT /J009	B.C.

DESC: WIRING DIAGRAM H5-60

DESS: D.V. DATE: 88-02
VER.: APPR.:
APPL: EFF. W/J009 Δ
REF: H5-60
NO: D-060660 9/24 C

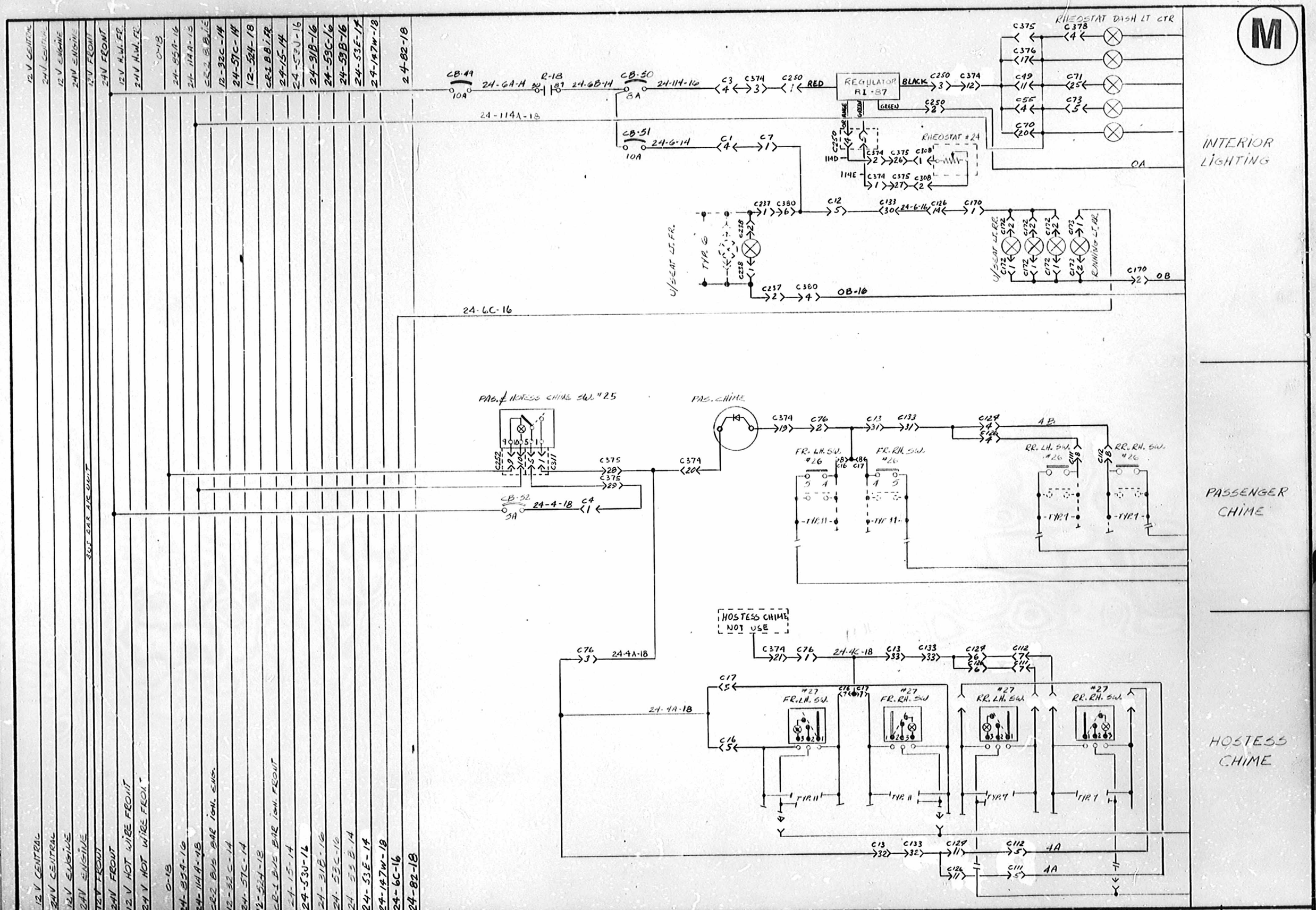

A	88-03	ETAIT /J008	B.C	DESC: WIRING DIAGRAM H5-60	DESS: D.T. / DATE- 88-02
ITEM	DATE	REVISION	PAR	APPL: EFF. W/J009 (A) / REF: H5-60	VER.- / APPR.- / NO: D-060660 10/24 C

LEGEND

FRONT JUNCTION PANEL
REAR JUNCTION PANEL
BATTERY COMPARTMENT
CIRCUIT BREAKER
HARNESS CONNECTOR
BATTERY JUNCTION BLOCK
SINGLE CONNECTOR
DIODE (RECTIFIER)
OPTION

FRESH AIR SW. #23

A/C & HEAT SW. #22

REAR A/C LOGIC PANEL

HEAT

3 HEAT

2 COOL

COOL

A/C FAN ONLY

REAR DAMPER

FRONT DAMPER

HOT GEN. FIELD #14

ST1 WATER VALVE A/C (REAR)

ST2 WATER VALVE A/C (REAR)

ST3 WATER VALVE

RR HEATER LT.

RR COOL LT.

RR. HEAT LT.

REAR ELECTRONIC TRANSMITTER

RR. TEMP CONTR.

A/C & HEAT SYSTEM

ITEM	DATE	REVISION	PAR
B	90/11	D52 & EMER. DIODE TO D51	MJ
A	89/11	LANCE	SB

DESC: WIRING DIAGRAM

APPL: H5-60 VEH. EFF. 1009 PRIOR TO L034 REF: SPECIAL VOYAGEUR RETROFIT

DES: S.B. DATE: 89/11 VER: KC APPR: MM

NO: D-060660 11/24 C

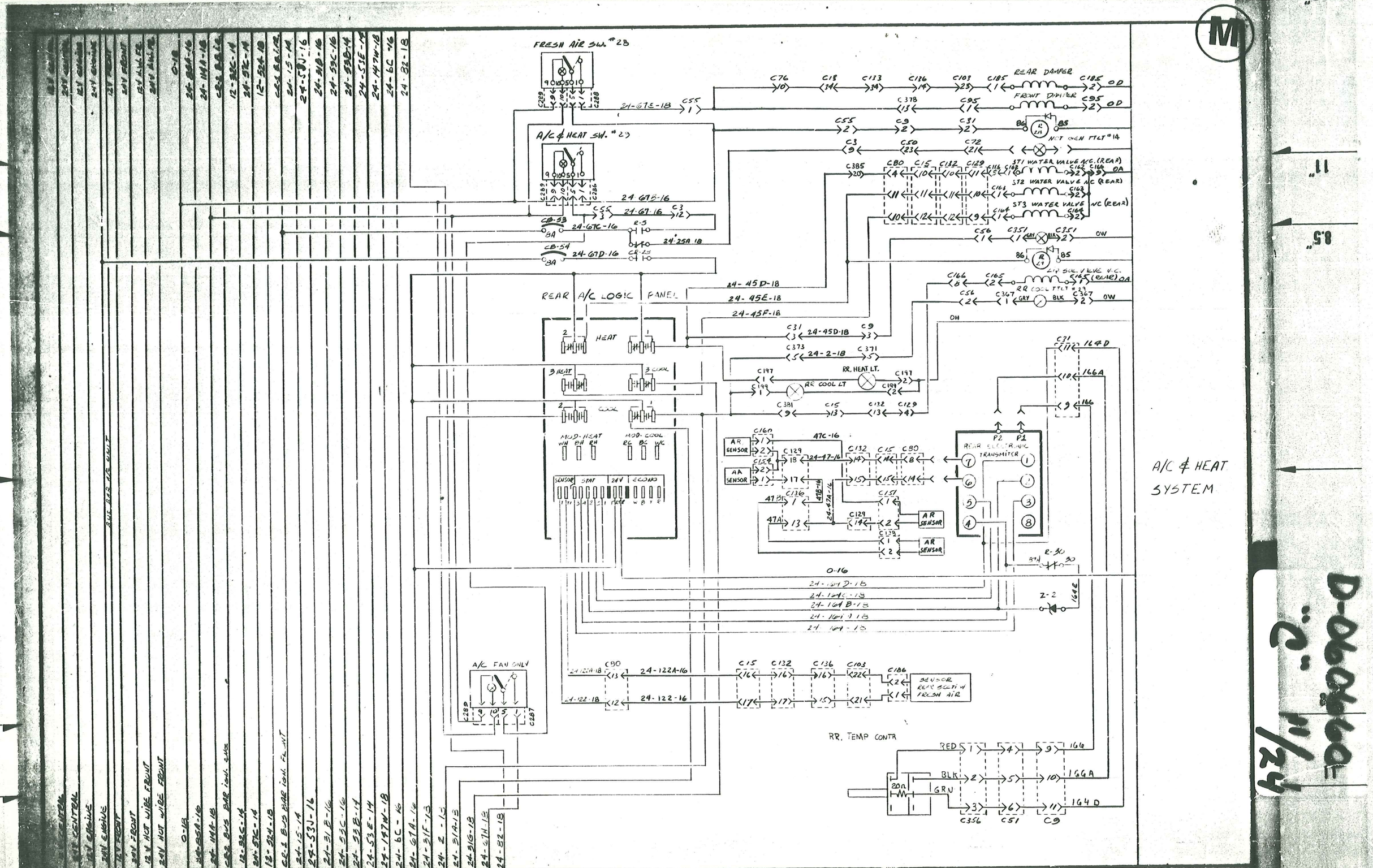

ITEM	DATE	REVISION	PAR
D	12-88	CD 15802	C
C	09-88	C.D.# 15247	O.C.
B	88-03	Z2 TOURNÉ DE COTÉ	M.L.
A	88-03	ETAIT /J008	B.C.

DESC: WIRING DIAGRAM

APPL: EFF. W/J009 (A)

REF: H5-60

DESS: D.T.

DATE: 88-02

VER.: KC

APPR.: RD

NO: D-060660 11/24 C

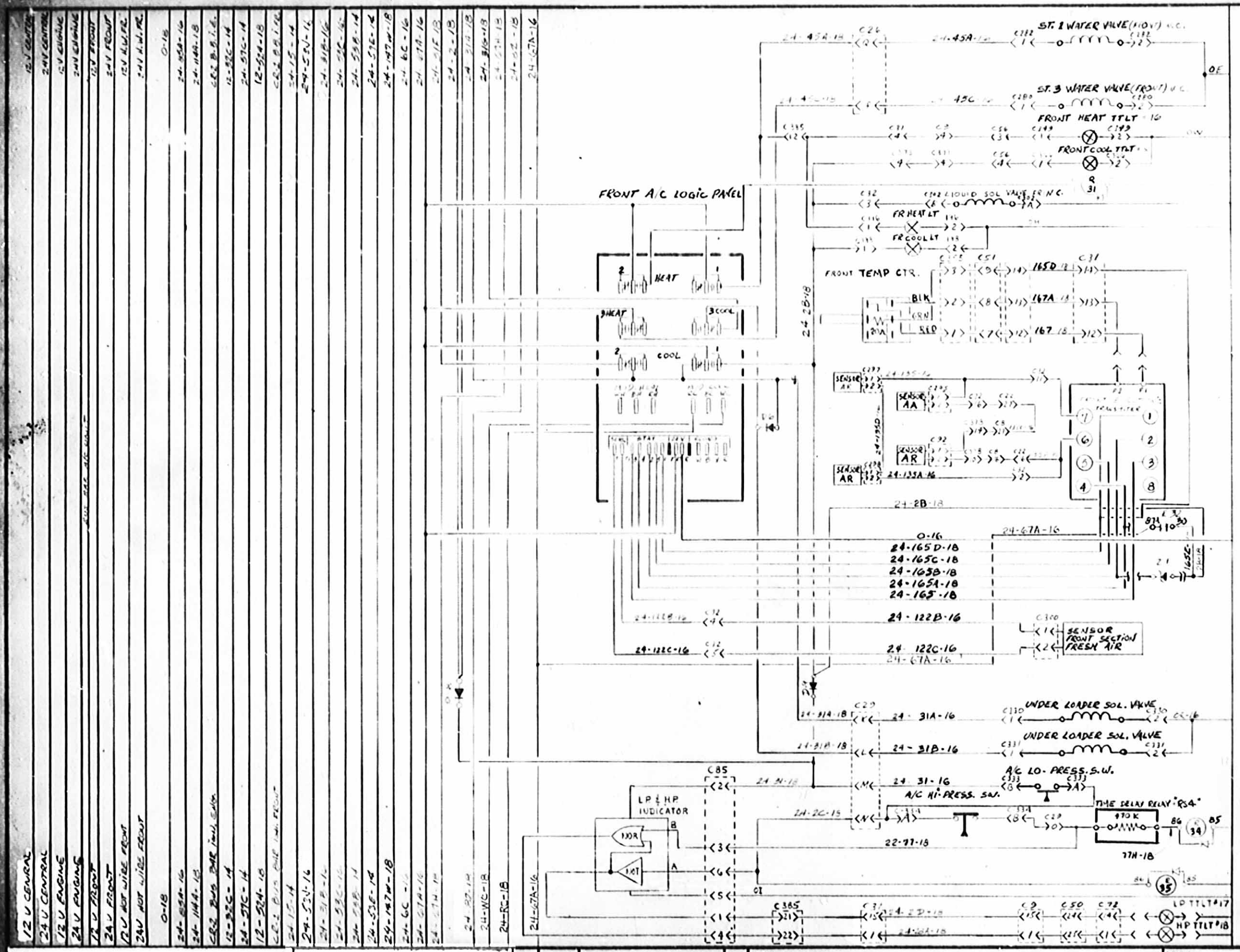

ITEM	DATE	REVISION	PAR
A	89/11	LANCE	SB

DESC: WIRING DIAGRAM

APPL: H5-60 VER EFF. J009 PRIOR TO L035

REF: SPECIAL VOYAGEUR RETROFIT

DESS: S.B

DATE: 89/11

VER.: KC

APPR.: RL

NO: D-060660 12A/24 C

12 V CENTRAL
24 V CENTRAL
12 V ENGINE
24 V ENGINE
12 V FRONT
24 V FRONT
12 V N.W.FR.
24 V N.W.FR.
0-18
24-85A-16
24-114A-18
CR2 B.B.i.E.
12-32C-14
24-57C-14
12-324-18
CR4 B.B.i.FR.
24-15-14
24-58N-16
24-31B-16
24-58C-16
24-53B-14
24-53E-14
24-147W-18
24-6C-16
24-6TA-16
24-31F-18
24-2-18
24-31A-18
24-31G-18
24-67H-18
24-32-18

12 V CENTRAL
24 V CENTRAL
12 V ENGINE
24 V ENGINE
12 V FRONT
24 V FRONT
12 V HOT WIRE FRONT
24 V HOT WIRE FRONT
0-18
24-85A-16
24-114A-18
CR2 BUS BAR i&u ENG.
12-32C-14
24-57C-14
12-324-18
CR1 BUS BAR i&u FRONT
24-15-14
24-53J-16
24-31B-16
24-53C-16
24-53B-14
24-53E-14
24-147W-18
24-6C-16
24-6TA-16
24-6TH-18
24-32-18

FRONT A/C ELECTRIC PANEL
HEAT
COOL
MOD. HEAT WH BH RH
MOD COOL RC BC WC
SENS | STAT | 24V | ECONO
T 11 3 4 2 5 1 FAN R W B Y R
D6
D8
D9
24-2B-18
ST. 1 WATER VALVE (FRONT) N.C.
24-45A-18 C26 Q 24-45A-16 C282 1 C282 2 OE
ST. 3 WATER VALVE (FRONT) N.C.
24-45C-18 P 24-45C-16 C280 1 C280 2
FRONT HEAT TFLT #16
C385 12 C31 4 C9 4 C56 3 C349 1 C349 2 OW
FRONT COOL TFLT #30
C373 4 C371 4 C56 4 C366 1 C366 2
C32 3 C502 LIQUID SOL. VALVE (FR) N.C. C502 A
C196 1 FR HEAT LT 196 2 OH
C198 1 FR COOL LT 198 2
FRONT TEMP CTR.
C355 3 C51 9 14 165D-18 C31 14
BLK 2 8 13 167A-18 13
GRN
20Ω
RED 1 7 12 167-18 12
SENSOR AR C297 1 2 24-135-16 C32 11
SENSOR AA C295 1 2 C32 16 C24 27
C378 19 C8 27 135C-16
SENSOR AR C92 1 2 C378 10 C8 16 C22 16 135A-16
SENSOR AR C298 1 2 24-135A-16 C32 12
24-135D-16
FRONT ELECTRONIC TRANSMITTER P2 P1
R-32 814 30
Z1 165E-18
0-16
24-165D-18
24-165C-18
24-165B-18
24-165A-18
24-165-18
24-122B-16 C32 4 24-122B-16 C300 1 SENSOR FRONT SECTION FRESH AIR 2
24-122C-16 C32 5 24-122C-16
C29 K 24-31A-18 24-31A-16 C330 1 UNDER LOADER SOL. VALVE C330 2 OR-16
L 24-31B-18 24-31B-16 C331 1 UNDER LOADER SOL. VALVE C331 2
M 24-31-16 N/C LO-PRESS. S.W. C333 3 4 C333 A
A/C HI-PRESS. SW.
N 24-2C-18 C-334 A 3 4 C-334 B C29 D TIME DELAY RELAY #R54 470K 86 R 54 85
22-77-18 77H-18
L.P. & H.P. INDICATOR NOR NOT B A
C85 2 3 6 5 1 4
OI
86 R 55 85
C385 21 22 C31 15 24-2D-18 1 24-28A-18 C9 15 1 C50 24 25 C72 14 1
LP TTLT #17
H P TTLT #18

A/C & HEAT SYSTEM

ITEM	DATE	REVISION	PAR
C	09-88	C.D.# 15248	D.C.
B	88-03	Z-1 TOURNER DE COTE'	M.L
A	88-03	ETAIT /J008	B.C

DESC: WIRING DIAGRAM
APPL: EFF. W/J009 ⚠
REF: H5-60
DESS: D.V.
VER.- C
DATE- 88-02
APPR.-
NO: D-060660 12/24 C

8.5"
11"
17"

12V CENTRAL
24V CENTRAL
12V ENGINE
24V ENGINE
12V FRONT
24V FRONT
12V H.D. RR.
24V H.D. RR.
12V HOT WIRE
24V HOT WIRE

24-312-18
24-31V-14
24-37-14
24-31C-14
24-21B-14
24-67A-16
24-67H-16
24-67V-18
24-67V-16
24-77A-18
24-34A-18
24-34-16
24-41-8
24-168-16
24-168A-16
24-77A-18
24-45A-18
24-45B-18
24-42G-18
24-11A5-18
24-45-18
24-45C-18
24-107W-18
24-6C-18
24-02-18

C853 5A
C856 15A
C857 30A
C862 30A
C863 30A
C864 30A
C865 5A
C866 10A

D21
D26
R36
R37
R39
R55
C55
C371
C373
C29
C312
C378
C379
C380
C381
C382
C383
C384
C385
C386
C387
C388
C389
C390
C391
C392
C393
C394
C395
C396
C397
C398
C399
C400
C401
C402
C403
C404
C405
C406
C407
C408
C409
C410
C411
C412
C413
C414
C415
C416
C417
C418
C419
C420
C421
C422
C423
C424
C425
C426
C427
C428
C429
C430
C431
C432
C433
C434
C435
C436
C437
C438
C439
C440
C441
C442
C443
C444
C445
C446
C447
C448
C449
C450
C451
C452
C453
C454
C455
C456
C457
C458
C459
C460
C461
C462
C463
C464
C465
C466
C467
C468
C469
C470
C471
C472
C473
C474
C475
C476
C477
C478
C479
C480
C481
C482
C483
C484
C485
C486
C487
C488
C489
C490
C491
C492
C493
C494
C495
C496
C497
C498
C499
C500
C501
C502
C503
C504
C505
C506
C507
C508
C509
C510
C511
C512
C513
C514
C515
C516
C517
C518
C519
C520
C521
C522
C523
C524
C525
C526
C527
C528
C529
C530
C531
C532
C533
C534
C535
C536
C537
C538
C539
C540
C541
C542
C543
C544
C545
C546
C547
C548
C549
C550
C551
C552
C553
C554
C555
C556
C557
C558
C559
C560
C561
C562
C563
C564
C565
C566
C567
C568
C569
C570
C571
C572
C573
C574
C575
C576
C577
C578
C579
C580
C581
C582
C583
C584
C585
C586
C587
C588
C589
C590
C591
C592
C593
C594
C595
C596
C597
C598
C599
C600
C601
C602
C603
C604
C605
C606
C607
C608
C609
C610
C611
C612
C613
C614
C615
C616
C617
C618
C619
C620
C621
C622
C623
C624
C625
C626
C627
C628
C629
C630
C631
C632
C633
C634
C635
C636
C637
C638
C639
C640
C641
C642
C643
C644
C645
C646
C647
C648
C649
C650
C651
C652
C653
C654
C655
C656
C657
C658
C659
C660
C661
C662
C663
C664
C665
C666
C667
C668
C669
C670
C671
C672
C673
C674
C675
C676
C677
C678
C679
C680
C681
C682
C683
C684
C685
C686
C687
C688
C689
C690
C691
C692
C693
C694
C695
C696
C697
C698
C699
C700
C701
C702
C703
C704
C705
C706
C707
C708
C709
C710
C711
C712
C713
C714
C715
C716
C717
C718
C719
C720
C721
C722
C723
C724
C725
C726
C727
C728
C729
C730
C731
C732
C733
C734
C735
C736
C737
C738
C739
C740
C741
C742
C743
C744
C745
C746
C747
C748
C749
C750
C751
C752
C753
C754
C755
C756
C757
C758
C759
C760
C761
C762
C763
C764
C765
C766
C767
C768
C769
C770
C771
C772
C773
C774
C775
C776
C777
C778
C779
C780
C781
C782
C783
C784
C785
C786
C787
C788
C789
C790
C791
C792
C793
C794
C795
C796
C797
C798
C799
C800
C801
C802
C803
C804
C805
C806
C807
C808
C809
C810
C811
C812
C813
C814
C815
C816
C817
C818
C819
C820
C821
C822
C823
C824
C825
C826
C827
C828
C829
C830
C831
C832
C833
C834
C835
C836
C837
C838
C839
C840
C841
C842
C843
C844
C845
C846
C847
C848
C849
C850
C851
C852
C853
C854
C855
C856
C857
C858
C859
C860
C861
C862
C863
C864
C865
C866
C867
C868
C869
C870
C871
C872
C873
C874
C875
C876
C877
C878
C879
C880
C881
C882
C883
C884
C885
C886
C887
C888
C889
C890
C891
C892
C893
C894
C895
C896
C897
C898
C899
C900
C901
C902
C903
C904
C905
C906
C907
C908
C909
C910
C911
C912
C913
C914
C915
C916
C917
C918
C919
C920
C921
C922
C923
C924
C925
C926
C927
C928
C929
C930
C931
C932
C933
C934
C935
C936
C937
C938
C939
C940
C941
C942
C943
C944
C945
C946
C947
C948
C949
C950
C951
C952
C953
C954
C955
C956
C957
C958
C959
C960
C961
C962
C963
C964
C965
C966
C967
C968
C969
C970
C971
C972
C973
C974
C975
C976
C977
C978
C979
C980
C981
C982
C983
C984
C985
C986
C987
C988
C989
C990
C991
C992
C993
C994
C995
C996
C997
C998
C999
C1000

RC
WC
OR
OB
OA
OW
GRN
BRN
BLK
RED
BLUE
GREY
WHITE
YELLOW
GREEN
BROWN

WATER PUMP REAR
WATER PUMP CONTROL
ST2 WATER VALVE PR NC
A/C COMP CLUTCH
EVAP FAN SPEED MODULE
IGNITION SWITCH
DRIVER'S HTR FAN SPEED CTR RHEOSTAT
DRIVER'S HTR FAN SPEED CTR MODULE
DRIVER'S Z10 SOL VALVE (N.C.)
DRIVER'S HTR WATER VALVE N.O.
DRIVER'S TEMP CONTROL RHEOSTAT
DEFROSTER FAN MOTOR
LH
RH

A/C & HEAT SYSTEM

					DESC: WIRING DIAGRAM	DESS: S.B.	DATE: 89/11
						VER.:	APPR.:
A	89/11	LANCE	S.B.		APPL: 115-60 VER EFF J009 PRIOR TO L035	REF: SPECIAL VOYAGEUR RETROFIT	NO: D-060660 13/24 C
ITEM	DATE	REVISION	PAR				

M

A/C & HEAT SYSTEM

12V CENTRAL
24V CENTRAL
12V ENGINE
24V ENGINE
BUS BAR ASSIGNMENT
12V FRONT
24V FRONT
12V H.W. RR.
24V H.W. RR.
0-18
24-85A-16
24-114A-18
CR2 B.S.I.E.
12-32C-14
24-57C-14
12-524-18
CR2 B.S.I.E.
24-15-14
24-53J-16
24-31B-16
24-55C-16
24-53E-14
24-53E-14
24-147W-18
24-6-C-16
24-67
24-67
24-82

CB55 5A — 24-31E-18 — R38 — C55 E
CB56 15A — 24-51D-14 — R21 — C371 G — C373 6 — 24-67H 16 — D26
C281 ST2 WATER VALVE FR N.C. C281
WATER PUMP-CLUTCH C279 C279 (WP 1)
CB51 15A — C26 C — 24-51A-14 — 24-51C-14 — 24-51B-14 — C26 F — R31 87A 30 87
24-41A-16 — D21 — 24-67J-18 — 24-67J-16 — R37 86 85 — R30 86 85
24-118-16 — R34 30 87 — 24-77A-18 — C29 U — 24-77A-16 — C332 1 — A/C COMP. CLUTCH C332 2 OR
CB58 — R35 30 87 — 24-34A-18 — C29 R — C379 2 — C379 1 — C29 P — 24-34-16 — C276 1 — COND. FAN SOL. VALVE C276 2 OF
CB60 40A — 24-42-8 — EVAPORATOR FAN MOT. FRONT RH
CB59 40A — 24-90L-1 — D36 B — 24-90F-4 — CB61 40A — 24-41-8 — LH
24-24F-2
CB62 40A — 24-90B-1 — C31 B — 24-90E-4 — C14 C — C131 C
C363 40A — EVAP. FAN MOT. REAR RH
CB64 40A — 24-41A-8 — LH

CB65 5A — 24-168-16 — C32 9 — HUMIDISTAT — C32 15 — 24-168A-16 — R32 86 85 — A30 86 85

24-77A-18 — C31 G — C385 9

DRIVER'S HTR FAN SPEED CTR RHEOSTAT
J4 R1 V5 R6 03
C353 C51 — J4-18 R1-18 V5-18 R6-18 03-18 — C57
24-45B-18 — C57 9 — 24-45H-18
C9 6 — C57 2 — C175 — GREY RED WHITE BLK BLK RED BLUE GREY — DRIVER'S HTR FAN SPEED CTR MODULE
R38 — CB66 10A — 24-21A-14 — C1 C57 7 1 — 24-21B-14
OH-14 — C57 5
21A 1A 2A 6A 21B 3A 9A 8A
C57 10 8 — 24-45G-18
24-116B-18 — 24-45G-18

C378 11 — CB8 A B — OB — DRIVER'S LIQ SOL. VALVE (N.C.)
C378 12 — CB9 A B — OB — DRIVER'S HTR WATER VALVE N.O.
C51 15 — 45A
C51 16 — 45B
C51 C56 C352 — SENSOR BRN BLK RED
C354 — 24-116B-18 — 24-45G-18 — GRN YEL ORN
OW
01
DRIVER'S TEMP CONTROL RHEOSTAT

DEFROSTER FAN MOTOR
29B — OB — C178 — BROWN GREEN — LH
OA — 29A — C179 — GREEN BROWN — RH

LEGEND

ITEM	DATE	REVISION	PAR
C	88-05	CB65 ETAIT 8A	MJ
B	88-05	MISE A JOUR	BC.
A	88-03	ETAIT /J008	

DESC : WIRING DIAGRAM

DESS: D.T. — DATE- 88-02
VER.- — APPR.-
APPL: EFF. W/J009 (A) — REF: H5-60 — NO: D-060660 13/24 C

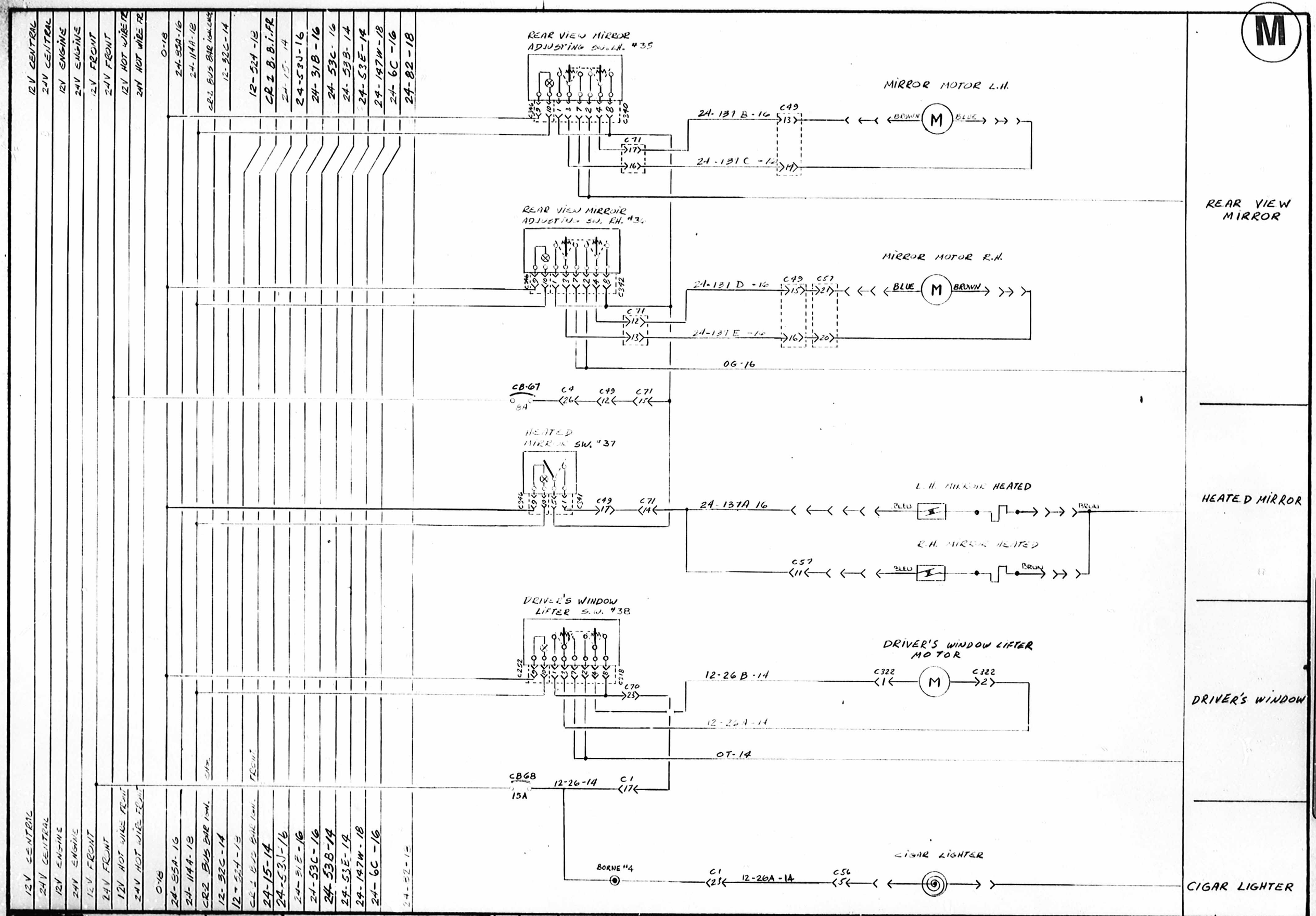

LEGEND

FRONT JUNCTION PANEL	BATTERY JUNCTION BLOCK
REAR JUNCTION PANEL	SINGLE CONNECTOR
BATTERY COMPARTMENT	DIODE (RECTIFIER)
CIRCUIT BREAKER	OPTION
HARNESS CONNECTOR	

ITEM	DATE	REVISION	PAR
A	88-03	ETAIT /J008	B.C.

DESC: WIRING DIAGRAM H5-60

APPL: EFF. W/J009 △A

REF: H5-60

DESS: D.T.

DATE- 88-02

VER.-

APPR.-

NO: D-060660 14/24 C

M

12 V CENT
24 V CENT
12 V ENGINE
24 V ENGINE
12 V FRONT
24 V FRONT
12 V HOT WIRE FRONT
24 V HOT WIRE FRONT
0-18
24-85A-16
24-114A-18
CR-2 BUS BAR IGN. ENG.
12-32C-14
524-18
CR-1 BUS BAR IGN. FRONT
24-15-14
24-53J-16
24-31B-16
24-53C-16
24-53B-14
24-53E-14
24-147W-18
24-6C-16
24-82-18

STORE SW. LH

C252 9 10 1 3 7 2 4 8 C315

C70 19 → 72E → C45 12 → C211 1 RED → STORE. LH (M)
C70 15 → 72D → C45 13 → C211 2 BLK → STORE. LH (M)
OT-16

STORE SW RH

C252 9 10 1 3 7 2 4 8 C317

C52 12 → 72A-16 → C45 10 → C212 1 RED → STORE. RH (M)
C52 13 → 72B-16 → C45 11 → C212 2 BLK → STORE. RH (M)
C52 21 → OT-16

CB-75 10A
72-14 → C1 19 → C70 2
CB-112 5A

FR DEST SIGN LT SW

C252 9 10 5 1 C314

C70 11 → 24-11-16 → C45 19 → C368 3

FLUORESCENT
RED
BLK
BALLAST
WHITE
0-A → C368 2

FR DEST. SIGN OPERATING SW

C252 9 10 5 1 C309

C45 15 → 11A-16 → C368 1
11B
COM N.O. N.C.
11D
M
11E COM N.O. N.C.
11C
0A

C70 10 → 24-30A-12 → C6 20 → C380 3

24-30E-12 R 24-30-12 → ACCESSOIRE GALLEY

STORE

FRONT DESTINATION SIGN

OPTION GALLEY

LEGEND

ITEM	DATE	REVISION	PAR
A	88-03	ETAIT J008	B,C

DESC: WIRING DIAGRAM H5-60

DESS: D.V. DATE: 88-02

VER.- APPR.-

APPL: EFF. W/J009 ⚠ REF: H5-60

NO: D-060660 15/24 C

12 V CENT
24 V CENT
12 V ENGINE
24 V ENGINE
12 V FRONT
24 V FRONT
12 V HOT WIRE FRONT
24 V HOT WIRE FRONT
0-18
24-85A-16
24-114A-18
CR-2 BUS BAR IGN. ENG.
12-32C-14
524-18
CR-1 BUS BAR IGN. FR.
24-15-14
24-53J-16
24-31B-16
24-53C-16
24-55B-14
24-53E-18
24-147W-18
24-6C-18
24-32-18

STORE SW. LH

C252 9 10 1 3 7 2 4 8 C315

C70 14 → 72E → C45 12 → C211 1 RED M SUN VISOR LH
C70 15 → 72D → C45 13 → C211 2 BLK
OT-16

STORE SW RH

C252 9 10 1 3 7 2 4 8 C317

C52 12 → 72A-6 → C45 10 → C212 1 RED M SUN VISOR RH
C52 13 → 72B-16 → C45 11 → C212 2 BLK
C52 21 → OT-16

SUN VISOR

CB-75 10A
72-14 → C1 19 → C70 2
C3-112 5A

FR DEST SIGN LT SW

C252 3 10 1 5 C314

FLUORESCENT
BALLAST
WHITE
BLK

C70 11 → 24-11-16 → C45 9 → C36* 3
O-A → C36* 2

FRONT DESTINATION SIGN

FR DEST. SIGN OPERATING SW

C45 15 → 11A-16 → C36* 1
11B
COM N.O. N.C. 11D M 11E COM N.O. N.C.
11C
OA

C252 3 10 1 5 C309

C70 10 → 24-30A-12 → C6 20 → C380 3

OPTION GALLEY

24-30E-12 R → 24-30-12 → ACCESSOIRE GALLEY

12V CENT
24V CENT
12V ENGINE
24V ENGINE
12V FRONT
24V FRONT
12V HOT WIRE FRONT
24V HOT WIRE FRONT
0-18
24-85A-16
24-114A-18
CR-2 BUS BAR IGN. ENG.
12-32C-14
524-18
CR-1 BUS BAR IGN. FRONT
24-15-14
24-53J-16
24-31B-16
24-53C-16
24-55B-14
24-53E-18
24-147W-18
24-6C-16
24-32-18

LEGEND

FRONT JUNCTION PANEL	BATTERY JUNCTION BLOCK
REAR JUNCTION PANEL	SINGLE CONNECTOR
BATTERY DISTRIBUTION	DIODE (RECTIFIER)
CIRCUIT BREAKER	OPTION
HARNESS CONNECTOR	

ITEM	DATE	REVISION	
B	91/10	SUN VISOR ETAIT STORE	BE
A	88-03	ETAIT /J008	B.C

DESC: WIRING DIAGRAM

APPL: EFF. W/J009 ⚠ PRIOR L034 | REF: H5-60

DESS: D.T. | DATE- 88-02 | VER.- tc | APPR.- | NO: D-060660 15/24 | C

Q.E.D. 15/24

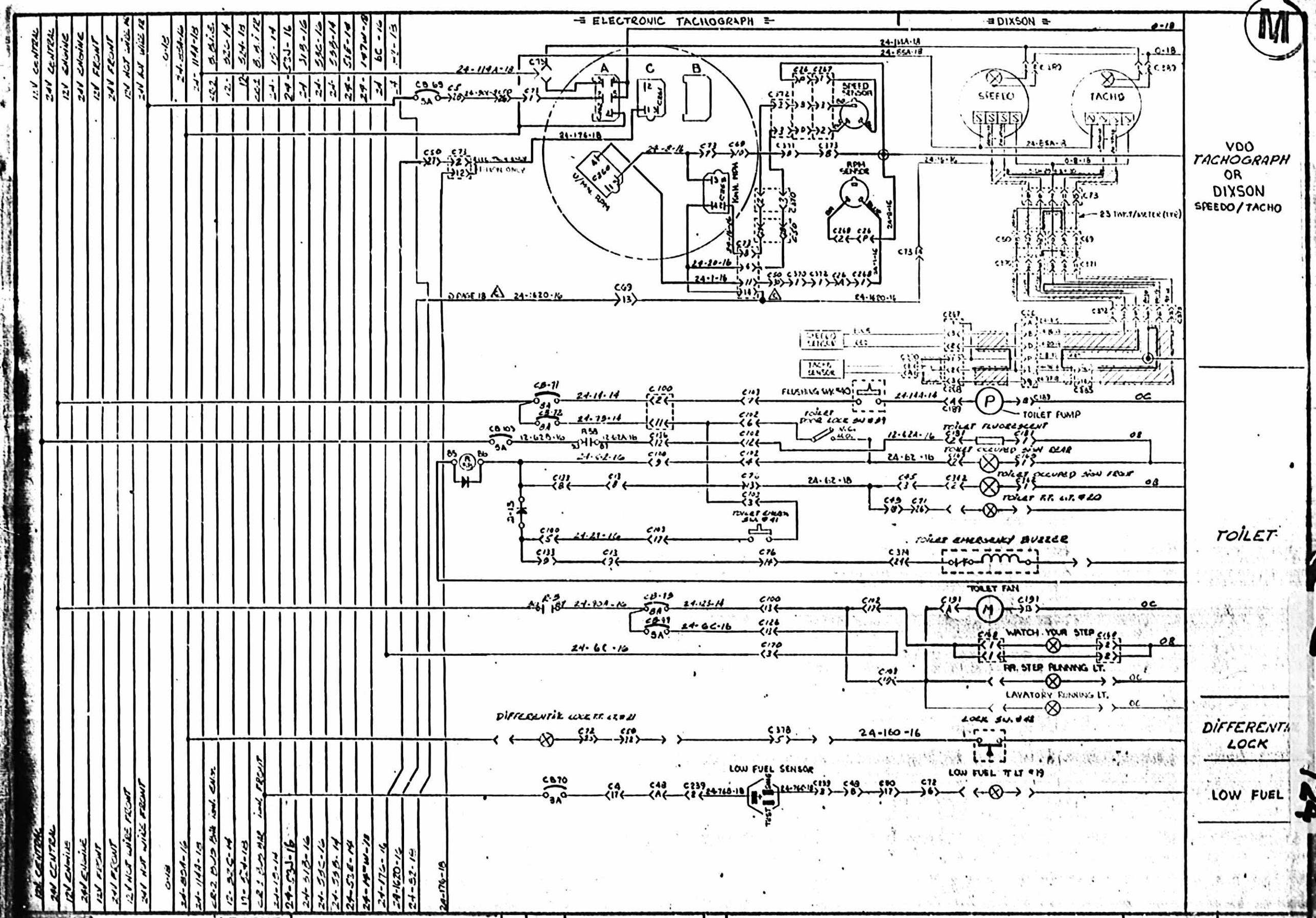

LEGEND

FRONT JUNCTION PANEL		BATTERY JUNCTION BLOCK	
REAR JUNCTION PANEL		SINGLE CONNECTOR	
BATTERY COMPARTMENT		DIODE (RECTIFIER)	
CIRCUIT BREAKER		OPTION	
HARNESS CONNECTOR			

ITEM	DATE	REVISION	PAR
B	91/02	MISE A JOUR	MJ
A	88/10	LANCE OC# 88165	MJ

DESC: WIRING DIAGRAM

APPL: EFF. W/ K020 PRIOR L033 | REF: HS-60

DESS: D.T. | DATE: 88-02 | VER.: | APPR.:

NO: D-060660 | 16A/24 | C

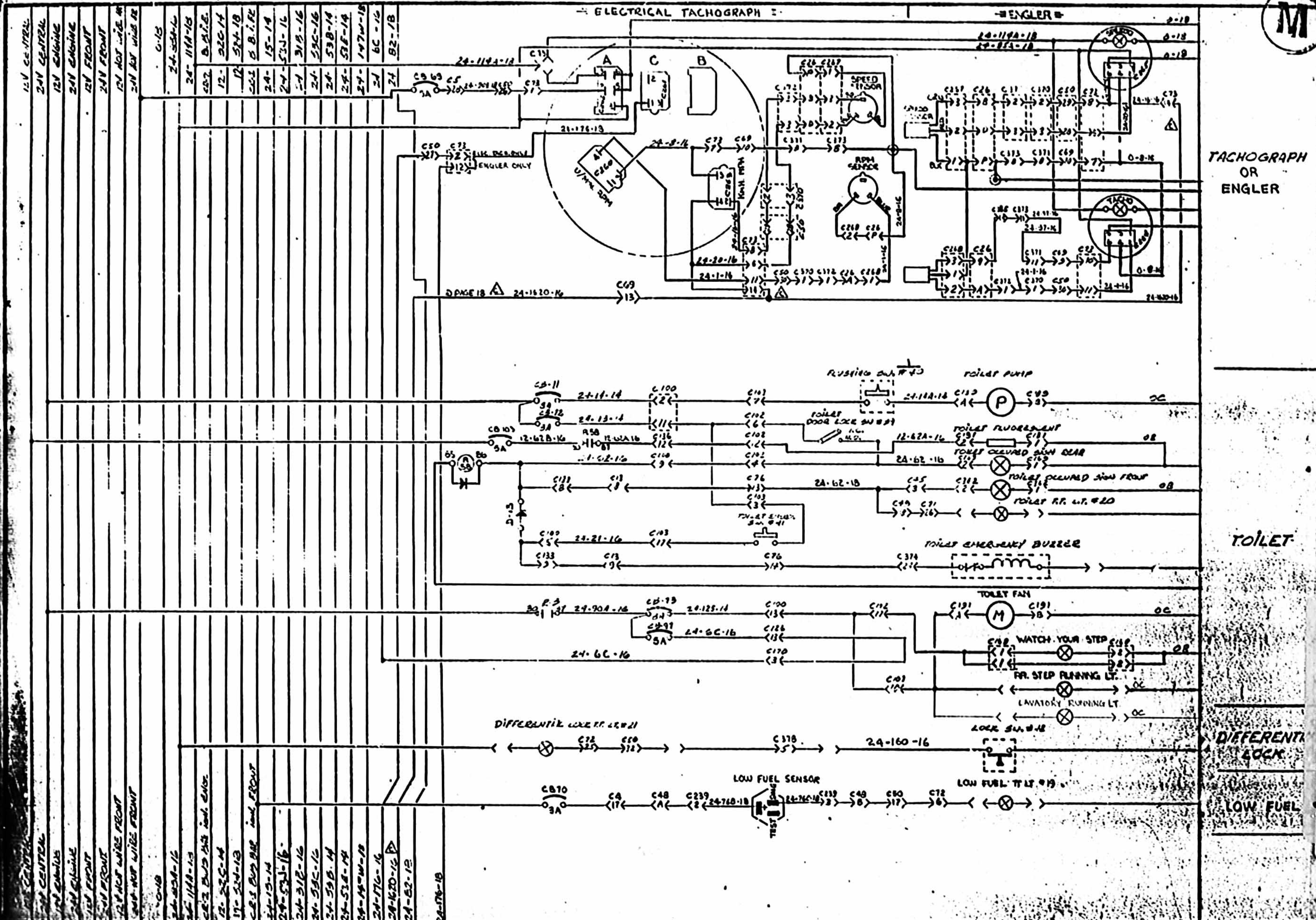

ITEM	DATE	REVISION	PAR
E	91-02	MISE A JOUR	M
D	88-07	CO# 15487	M
C	88-05	MISE A JOUR	M
B	88-05	MISE A JOUR	B.C
A	88-03	ETAIT /J008	B.C

DESC: WIRING DIAGRAM

APPLIEFF. W/J009 △ PRIOR L033

REF. HS-60

DESS. D.T.

DATE 88-02

NO D-060660

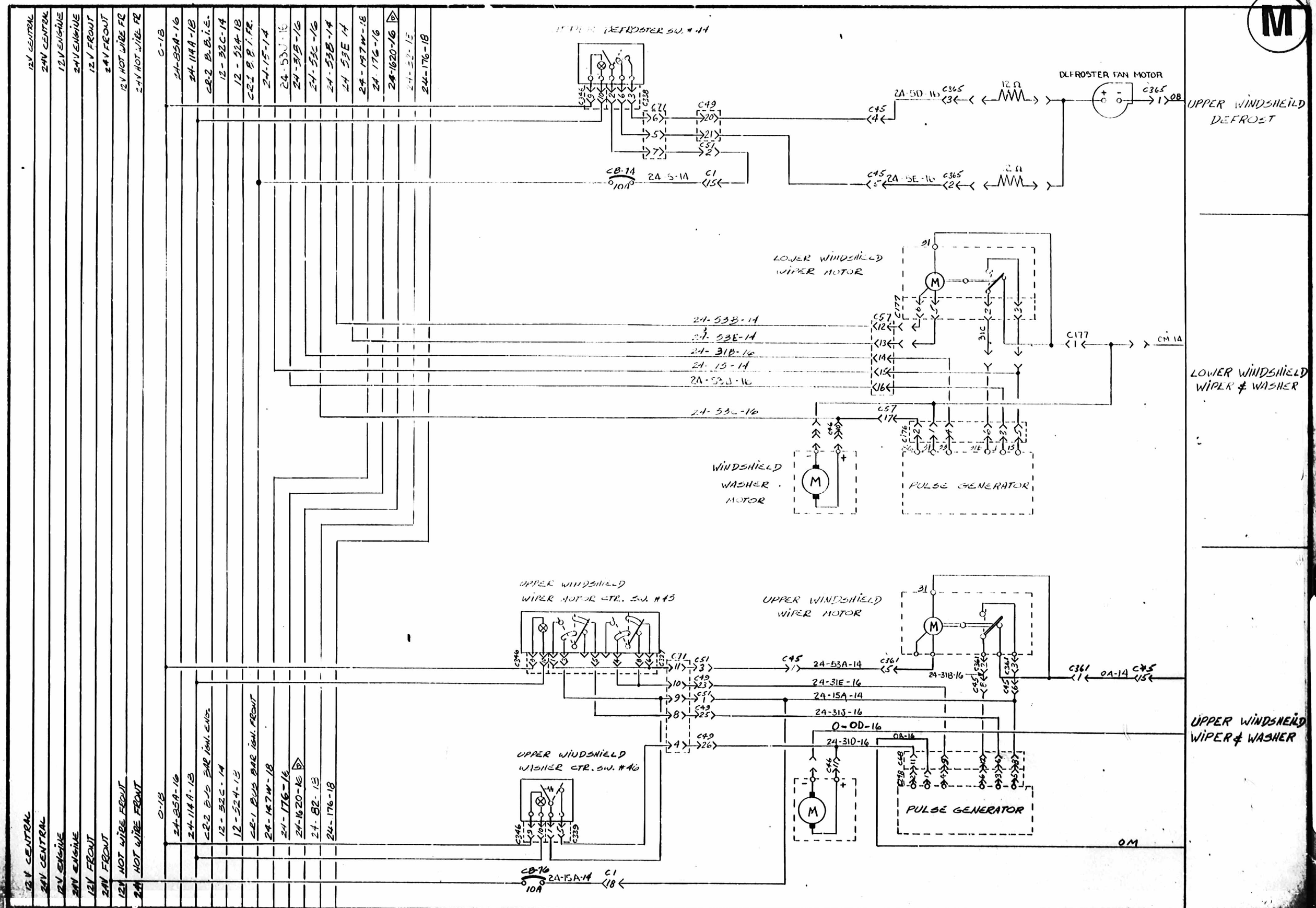

ITEM	DATE	REVISION	PAR
C	88-05	FIL 24-176-18 AJOUTÉ	ML
B	88-05	MISE A JOUR	ML
A	88-03	ETAIT /J008	B.C.

DESC : WIRING DIAGRAM

APPL: EFF. W/J009 (A)

REF: HS-60

DESS: D.V.

VER.-

DATE- 88-02

APPR.-

NO: D-060660 17/24

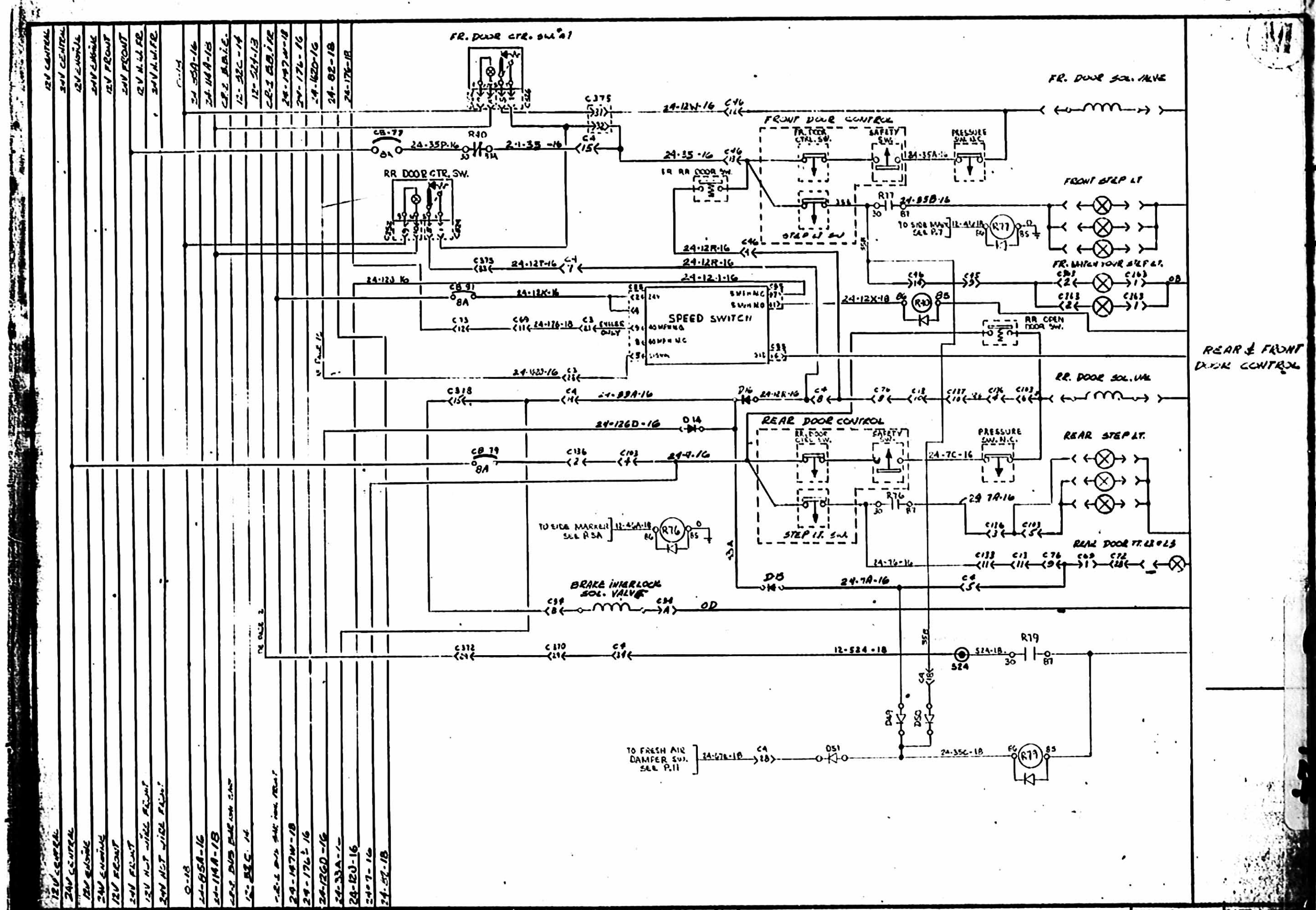

LEGEND

ITEM	DATE	REVISION	PAR
B	90-11	R76, R77 & R79 ADJUSTES.	MJ
	90-08	C.D.# 19807	DT
A	89/10	LANCE	MJ

DESC: WIRING DIAGRAM SPECIAL VOYAGEUR

APPL: EFF. W/J009 PRIOR L034 REF: H5-60

DESS: MJ DATE: 89/10

VER.

NO: D-060660 18A/24

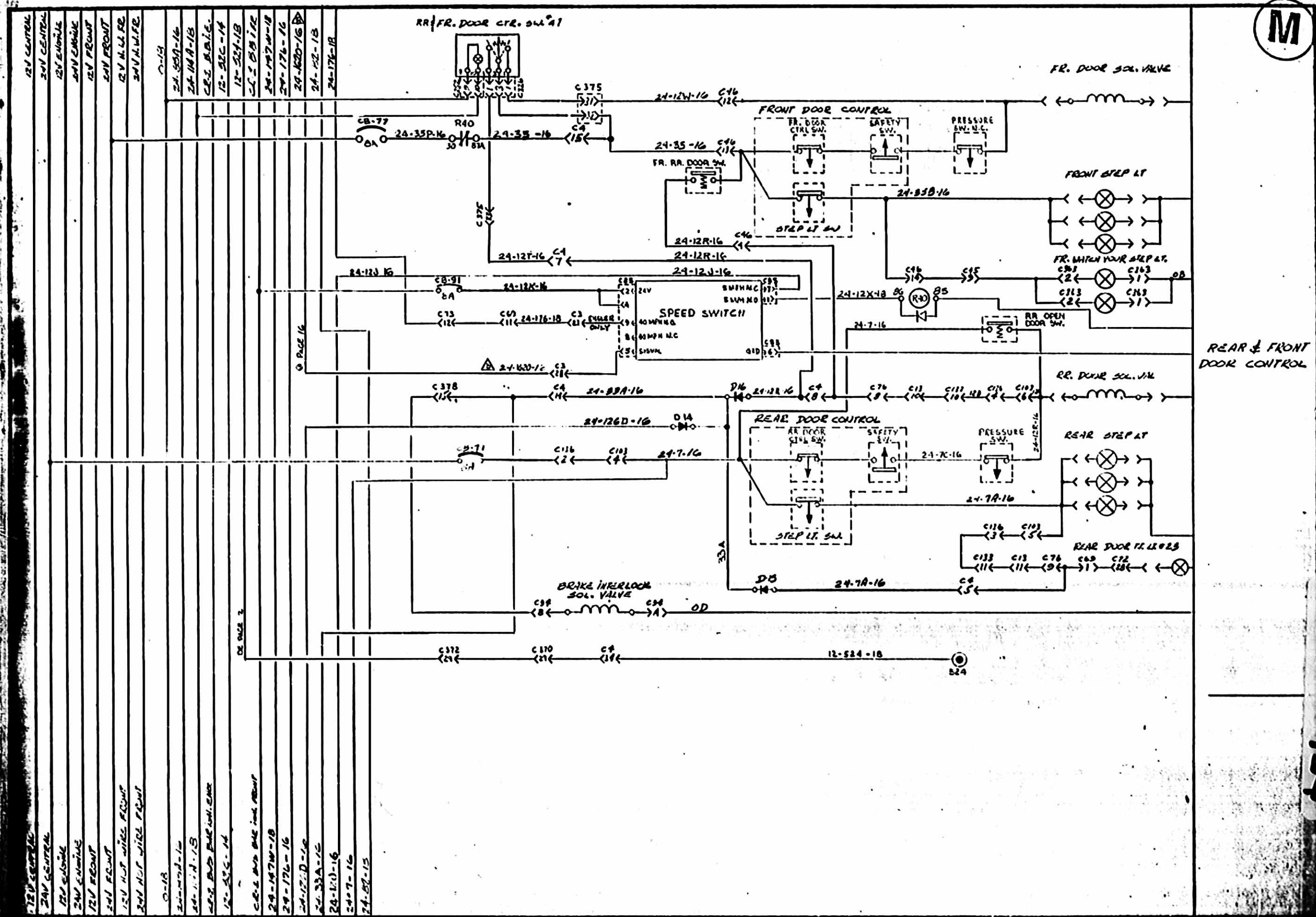

LEGEND

ITEM	DATE	REVISION	PAR
D	90-08	C.D. # 19807	DT
C	88-11	CD# 15700 OC# 88197	GC
B	88-05	MISE @ JOUR	MR
A	88-03	ETAIT /J008	BC

DESC: WIRING DIAGRAM

APPL: EFF. W/J009 △ PRIOR L034 | REF: H5-60

DESS: D.T. | DATE: 88-02 | VER: | APPR:

NO: D-060660 18/24

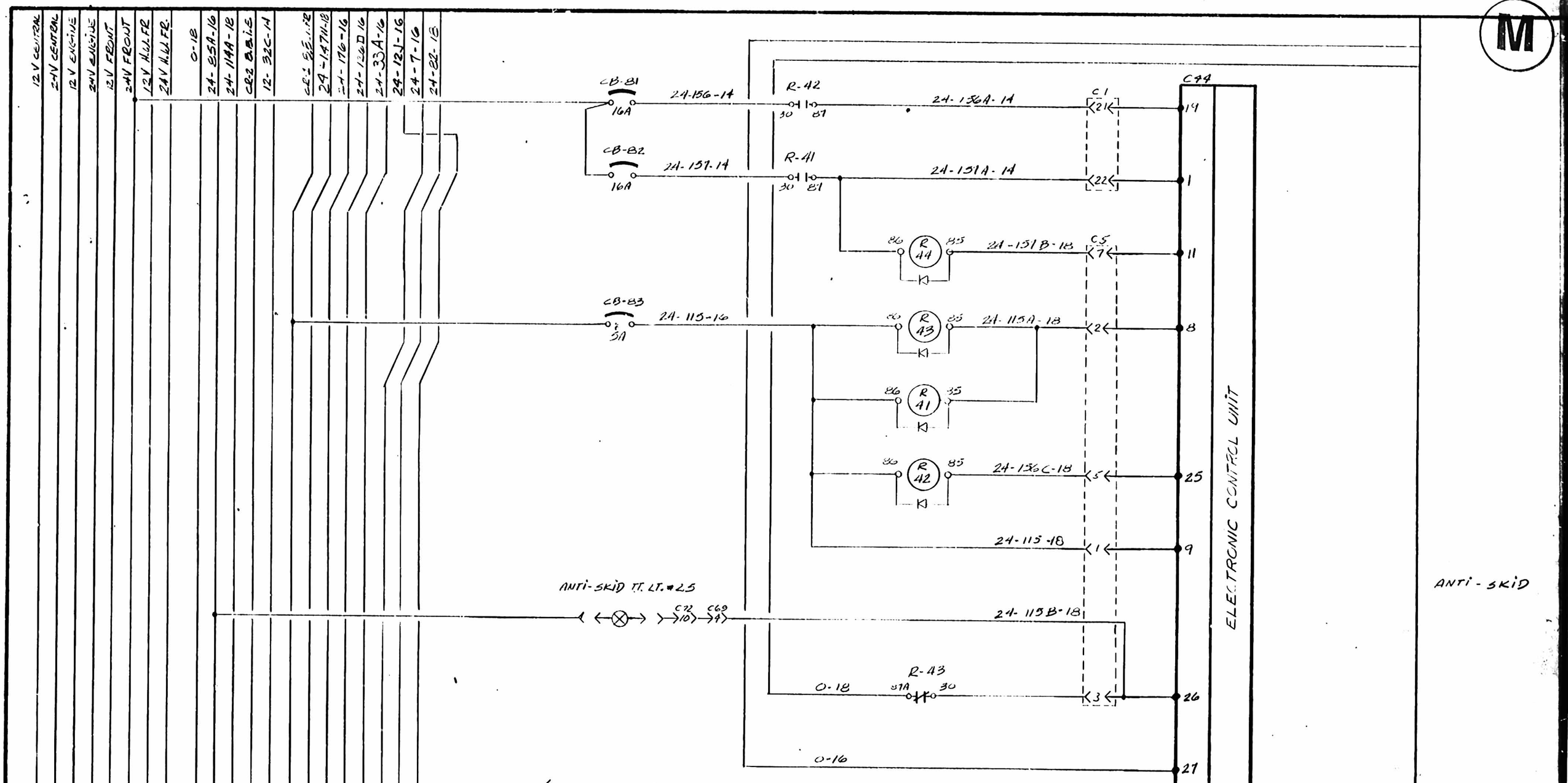

ELECTRIC CABLES WITHOUT MARK : 1 MM² OR 1,5 MM² = AWG 16
CONNECTING BOX WATER-PROOF
ELECTRIC FUSE CORRESPONDING TO DIN 72 581 OR CIRCUIT BREAKER

* CONNECTING CABLE TO OPERATE THE SOLENOID CONTROL VALVE 412 195 000 0
COLOUR : 1 GREEN/YELLOW, 2 BLUE, 3 BROWN

EV : INLET VALVE
AV : OUTLET VALVE

** OPTION : DRIVE SLIP CONTROL DSC
MOT : ACTUATOR FOR MOTOR CONTROL
DSV : ACTUATOR VALVE FOR DIFFERENTIAL-BRAKE

IF DRIVE SLIP VALVE ARE NOT INSTALLED
A SHORT (MAX. 1M) WIRE HARNESS SHOULD BE INSTALLED

SEE NEXT PAGE

12V CENTRAL
24V CENTRAL
12V ENGINE
24V ENGINE
12V FRONT
24V FRONT
12V HOT WIRE FRONT
24V HOT WIRE FRONT
0-18
24-85A-16
24-114A-18
CR-2 BUS BAR IGN. ENG.
12-32C-14
CR-1 BUS BAR IGN. FRONT
24-147W-18
24-176-16
24-126D-16
24-33A-16
24-7-16
24-82-18
24-12J-16

LEGEND

ITEM	DATE	REVISION	PAR
B	88-06	24-6C-16 enlevé	ML
A	88-03	ETAIT 1J008	BC

DESC : WIRING DIAGRAM

APPL: EFF. W/J009 △A

REF: H5-60

DESS: D.T.

VER: RC

88-02

NO: D-060660 19/24 C

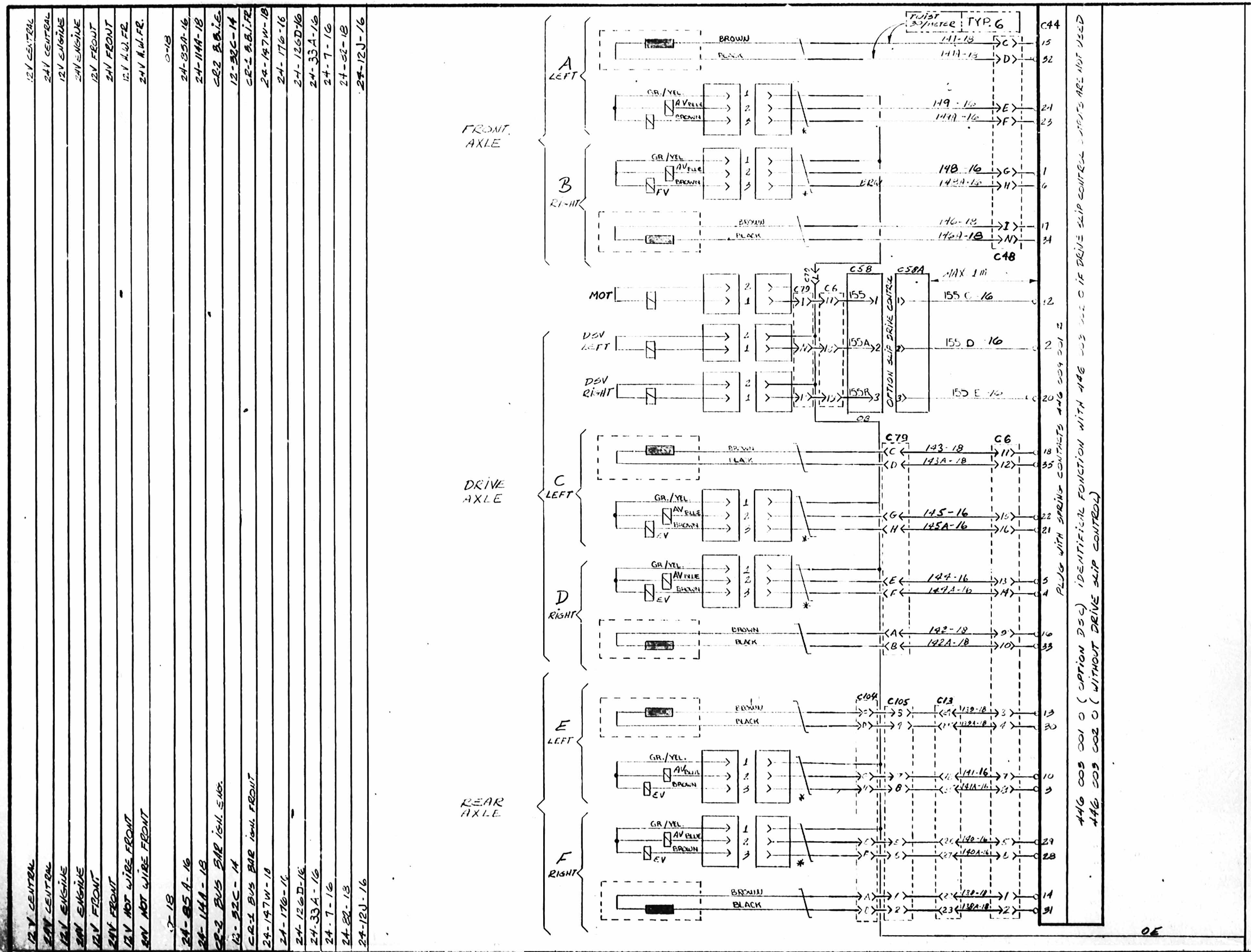

ITEM	DATE	REVISION	PAR
C	88-10	CD# 15359	ML
B	88-06	24-6C-16 ENLEVÉ	ML
A	88-03	ETAIT /J008	BC

DESC : WIRING DIAGRAM

APPL: EFF. W/J009 (A)

REF: H5-60

DESS: D.T.

DATE- 88-02

VER.- Kc

APPR.- [illegible]

NO: D-060660 20/24 C

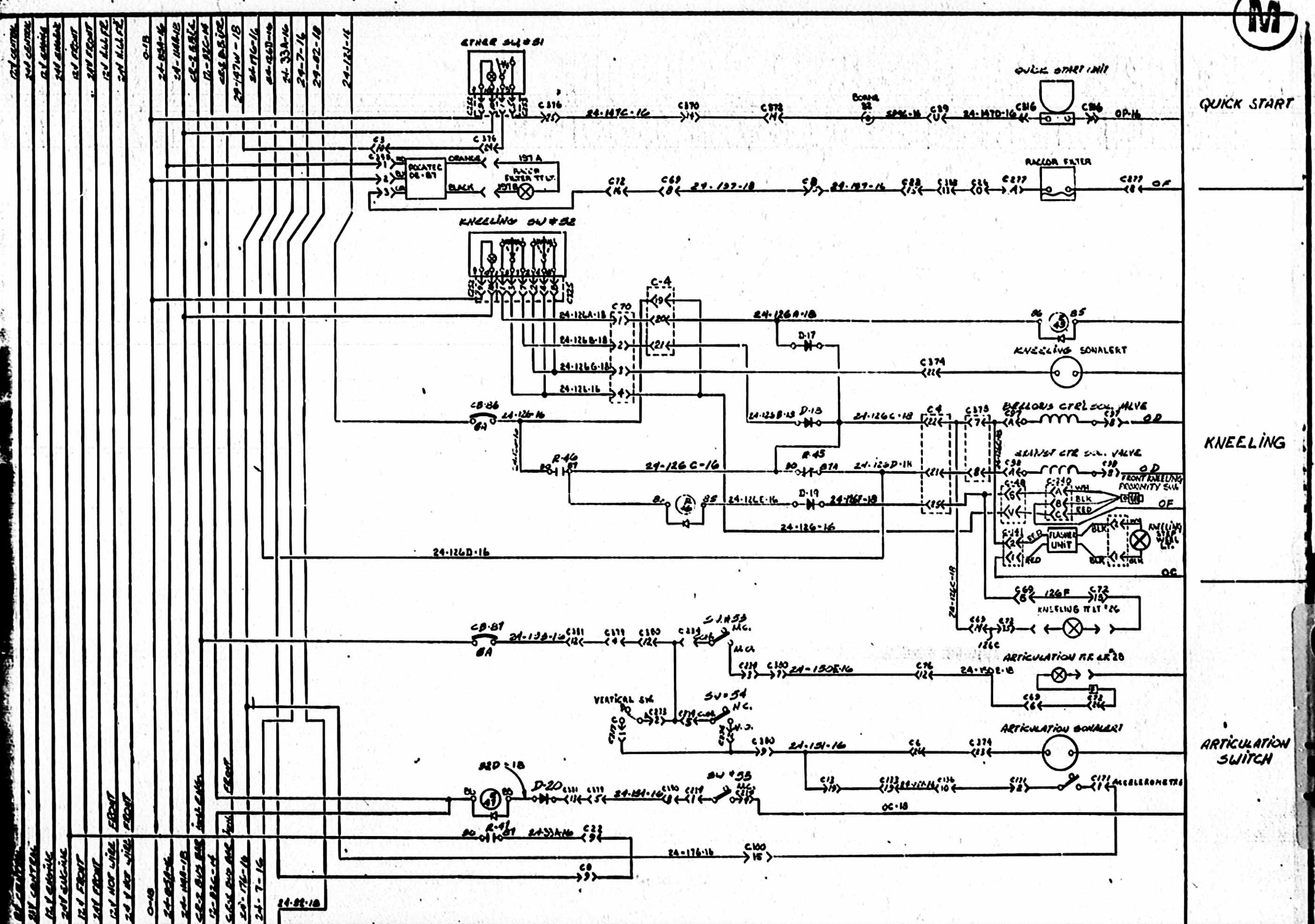

ITEM	DATE	REVISION	PAR
D	90-07	O.C.#90124, C.D.#19608	Rob
C	89-02	C.D.#16145, O.C.#89031	Rob
B	88-06	126 REPLACE 6C	ML
A	88-03	ETAIT/J008	BC

DESC: WIRING DIAGRAM

APPL: EFF. W/J008 (A) PRIOR LD34 | REF: HS-60

DESS: D.T. | DATE: 88-02 | VER.: | APPR.:

NO: D-060660 21/24 C

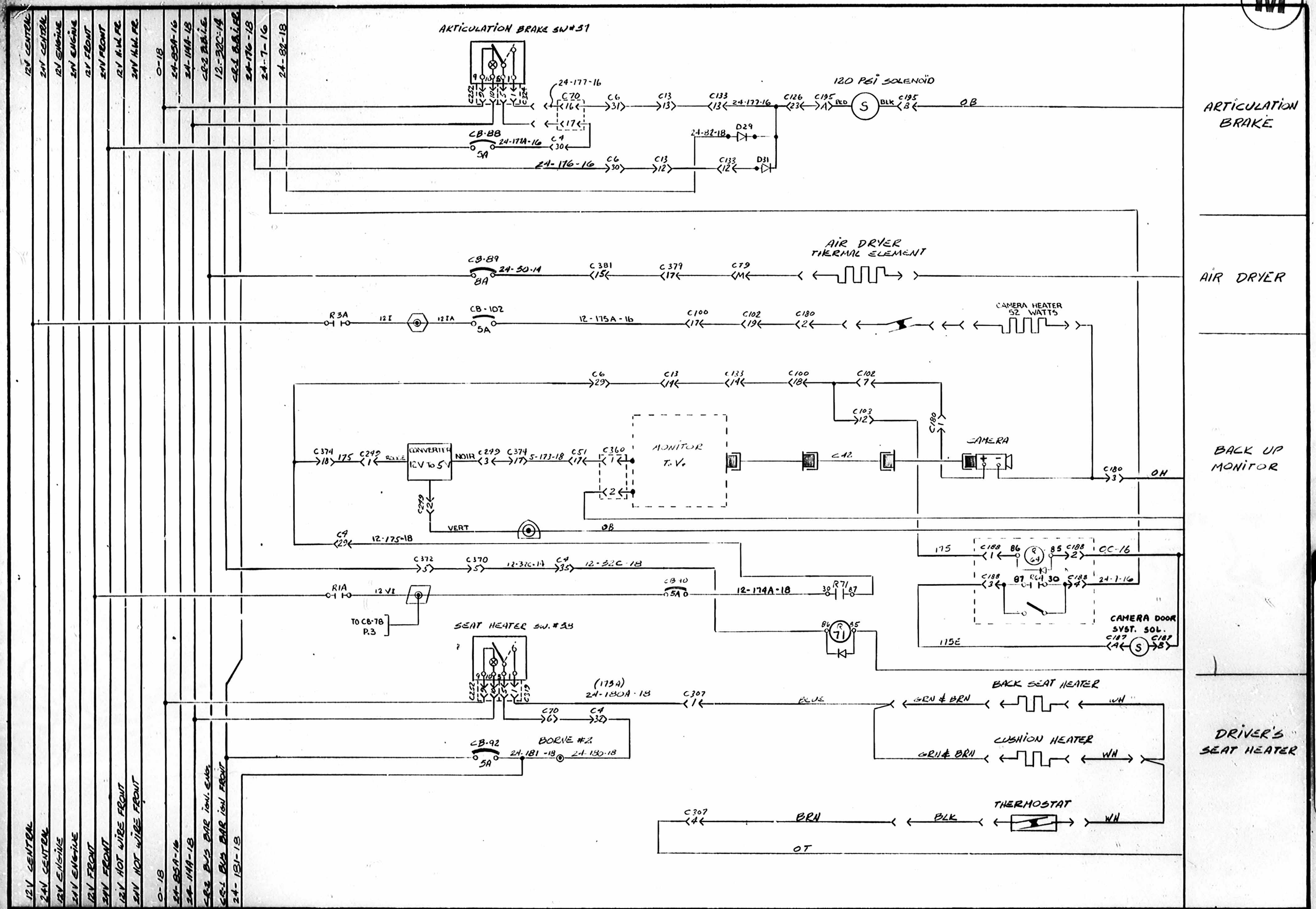

LEGEND		
FRONT JUNCTION PANEL		BATTERY JUNCTION BLOCK
REAR JUNCTION PANEL		SINGLE CONNECTOR
BATTERY COMPARTMENT		DIODE (RECTIFIER)
CIRCUIT BREAKER		OPTION
HARNESS CONNECTOR		

ITEM	DATE	REVISION	PAR
C	89-02	O.C.#89033, C.D.#16158	Rob.
B	88-06	MISE A JOUR	M.J.
A	88-03	ETAIT /J008	B.C.

DESC: WIRING DIAGRAM

APPL: EFF. W/J009 △

REF: H5-60

DESS: D.T.

DATE- 88-02

VER.-

APPR.-

NO: D-060660 22/24 C

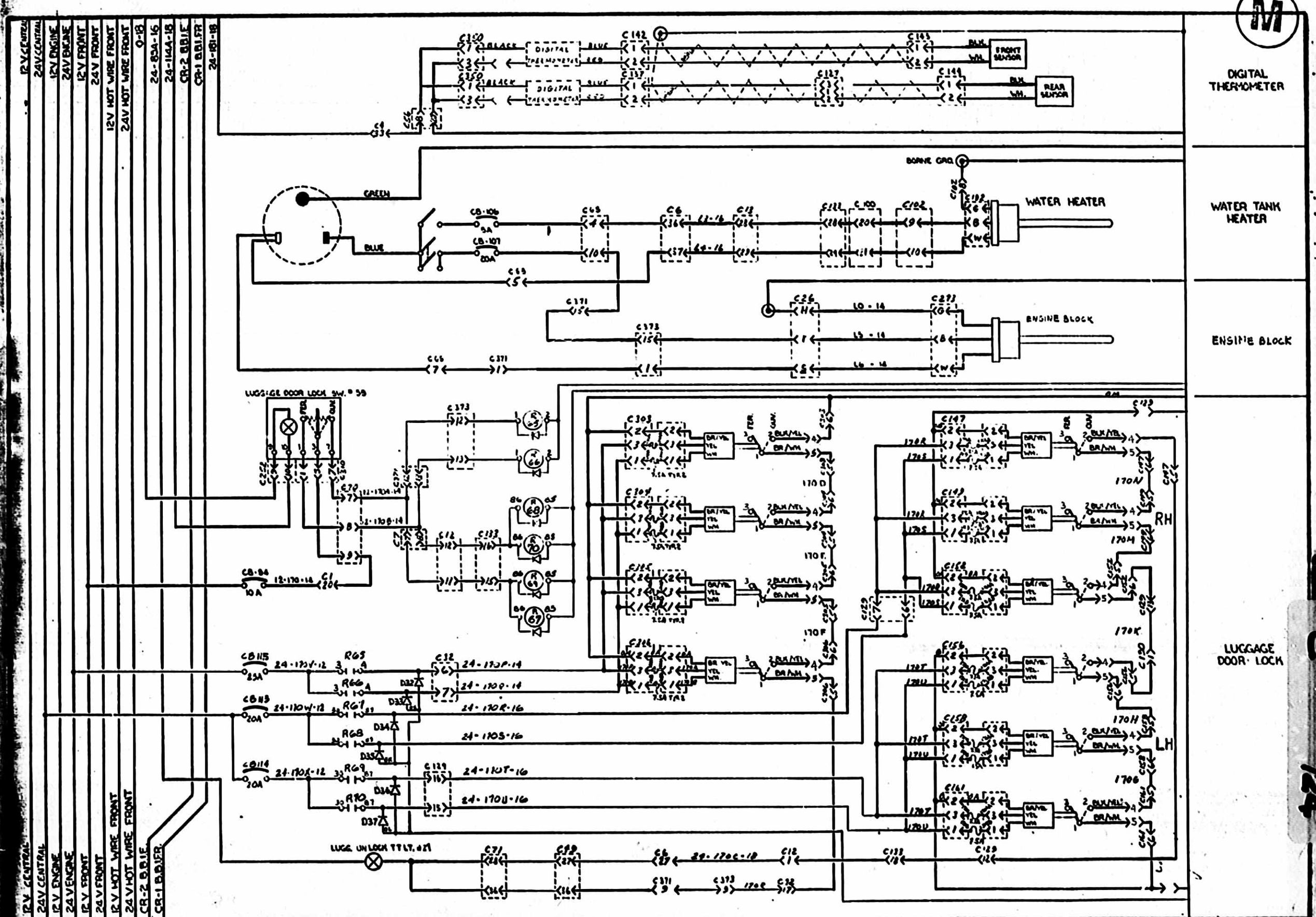

PREVOST

LEGEND

	FRONT JUNCTION PANEL		BATTERY JUNCTION BLOCK
	REAR JUNCTION PANEL		SINGLE CONNECTOR
	BATTERY COMPARTMENT		DIODE (RECTIFIER)
	CIRCUIT BREAKER		OPTION
	HARNESS CONNECTOR		

ITEM	DATE	REVISION	PAR
E	91-01	MISE A JOUR	M.L.
D	89-01	D32 & D37 AJOUTÉES OC#89012	M.L.
C	88-07	O.C. 88120 CD# 14680	B.C.
B	88-03	CD # 13579	AB
A	88-03	ÉTAIT J008 , DEVIENT J009	B.C.

DESC : WIRING DIAGRAM

APPL: EFF. W/J020 PRIOR L033 | REF: H5-60

DESS: D.T. | DATE- 88-02

VER.- | APPR.-

NO: D-060660 | 23/24 | C

M

12V CENTRAL
24V CENTRAL
12V ENGINE
24V ENGINE
12V FRONT
24V FRONT
12V NOT WIRE FRONT
24V NOT WIRE FRONT
CB2 BUS BAR
CB4 BUS BAR

12-120 B-14
0V-14
C75 17 0V-14
RR. LH. SPEAKERS

GAIN 0V 14V
AMPLIFIER FOR R.R. SECTION SPEAKERS 4x20W
LR LF RR RF
C226

C75 C7 C12 C133 C126 C113
20 14 G5-14 15 20 17 G5-18
21 15 G6-14 19 21 18 G6-18
15 16 G7-14 15 22 19 G7-18
16 17 G8-14 16 23 20 G8-18
5 21 D8-14 20 27 17 D8-18
4 20 D7-14 19 26 16 D7-18
3 19 D6-14 18 25 15 D6-18
2 18 D5-14 17 24 19 D5-18
C129 C122

ORANGE WIRE
12-120C-14
0V-14
RR. RH. SPEAKERS
FR. LH. SPEAKERS

GAIN 0V 14V CUTOUT
AMPLIFIER FOR FR. SECTION SPEAKERS 4x20W
LF LR RF RR
C220 C226 M20

C90 D5-14 D6-14 D7-14 D8-14 C39
G1-16 G2-16 G3-16 G4-16 C210
D4-16 D3-16 D2-16 D1-16 C214 C224 205
G1-18 G2-18 G3-18 G4-18 G5-18 G6-18 D6-18 D5-18 D4-18 D3-18 D2-18 D1-18
FR. RH. SPEAKERS

12V CUT OUT SW.
12-125S-10
CB-80 30A
FR. JCT. BOX COMPT. JCT. BLOCK
C75 10K 10K
12-120A-14
12-120C-14
CB-111 15A R73
CB-110 15A R72
C1 C1 C6
C3 12-120A-18
CB-95 15A 12-120B-14 C1 C8

R.A. VOLUME
RH. CONS MIC OUTLET
LH. CONS MIC FR SERV COMPT
OPTION SPARE MIC FR SERV COMPT
C229 C222 C223 C219 C227
M15 M16 M17 M10(1) M11(2) M12(3)
D9 D10 M10(1) M11(2) M12(3)
DRIVERS SPEAKER MIC OUTLET AMP PWR SUPPLY FUSE 2A
R.A. VOLUME
FUSE 10A
MIC OUTLET
POWER IN
FUSE 5A
TO AMPL. FROM RADIO FUSE 5A TO RADIO
C54 C54
120A 120D 0K
C220 M20 C221 M21

RADIO AM/FM/STEREO CASSETTE
REAR FRONT
M2 M1 M18 M17
C231 C232
C221 M21
FUSE 1A

D9-16 D10-16 C223 DR.IER'S RH. SPEAKER
G10-16 G9-16 C223 DRIVER'S LH. SPEAKER

FR. JCT. BOX COMPT. JCT. BLOCK
BATTERIES COMPT. GROUND STUD
0K-14 0SS-10 BATTERY NEG. POST
0V-14

M3 M9 12-120D-16 M6 D-16 M1 M4 M18 M17 M11 M2 M5
M14 M1 M3 C227
SPEAKER SELECTOR SWITCH

SOUND SYSTEM

LEGEND

FRONT JUNCTION PANEL		BATTERY JUNCTION BLOCK	
REAR JUNCTION PANEL		CABLE CONNECTOR	
BATTERY COMPARTMENT	-84-	SPLICE CONNECTOR	
CIRCUIT BREAKER	----	OPTION	
HARNESS CONNECTOR			

ITEM	DATE	REVISION	PAR
D	88/08	CD # 14833	MZ
C	88/08	CD #14 762	B.C.
B	88/03	C.D. # 13753	B.C.
A	88/03	R72 & R73 ADDITES	MZ

DESC : WIRING DIAGRAM

DESS: D.T DATE- 88-02
VER.- Lc APPR.- KK

APPL: EFF. W/J009 REF: HS-60

NO: D-060660 24/24 C